TRYSTAR

SERIES 700F POWER PROCESSOR

OWNERS MANUAL

125KVA

208V, 240V, 480V OR 600V INPUT

208/120, 400/230V OR 480/277V OUTPUT,

THREE PHASE, 60HZ

15765 Acorn Trail / Faribault, MN 55021 / 507.333.3990

TRYSTAR.com

IMPORTANT - SAVE THESE INSTRUCTIONS - PLEASE READ THIS MANUAL BEFORE USING EQUIPMENT

ABOUT THIS MANUAL

When viewing electronically, click on the subject to jump to that page. Clicking the header on the front page will launch the Trystar web site. Clicking any where else on the front page will also jump to the Table of Contents. Clicking any blue text will take you to that section of our website.

CAUTION

The following symbol indicates that caution should be taken when performing the process required in this manual. Damage to the unit or personal harm could happen if proper precautions are not taken.

WARNING

The following symbol indicates that there is a risk of electrical shock if proper precautions are not followed. Only qualified personnel should perform the actions required in this manual.

© 2026 All rights reserved.

TABLE OF CONTENTS

FEATURES AND SPECIFICATIONS ----------4
RECEIVING, INSPECTING AND STORING----------6
REMOVING THE UNIT FROM THE PALLET ----------7
SAFETY PRECAUTIONS----------8
PRELIMINARY INSTALLATION ----------9
INSTALLATION---------- 11
OPTION INSTALLATION ---------- 15
BYPASS OPERATION AND MONITORING --------- 20
START-UP ---------- 21
PREVENTIVE MAINTENANCE ---------- 22
PERFORMANCE CHECKLIST ---------- 23
GENERAL TROUBLESHOOTING ---------- 24
WARRANTY---------- 25
CUSTOMER SUPPORT ---------- 27
APPENDIX A---------- 28
RELATIVE DRAWINGS---------- 28
CABINET OUTLINE---------- 29
NOTES ---------- 31

© 2026 All rights reserved.

FEATURES AND SPECIFICATIONS

Trystar engineers and manufactures the industry's highest quality power processors and voltage regulators, capitalizing on 40 years of expertise. We have an enviable reputation for quality, which is reflected in the design, workmanship, and performance of our products.

Subjecting commercial and industrial electrical systems to a harsh, "polluted" electrical environment increases downtime, maintenance costs, and lost productivity. Maintaining steady, spike-free voltage and keeping ground noise away from the controls, increases the reliability of electronic equipment, contributes to the overall integrity of data, and enhances workflow and productivity.

Trystar's front access Series 700F Power Processor is a solid-state, automatic voltage regulator which guards against both high and low voltage conditions. The Series 700F easily corrects wide input voltage deviations to well within the safe operating limits for information technology equipment as recommended by CBEMA and ITIC. The power protection that the Series 700F delivers, meets the IEEE and ANSI standards that define power anomalies, occurrences, and their impact on operations.

Features & Benefits

- Front access only! All installation, operation, maintenance, and testing can occur from the front of the unit - no side or rear access required.
- 7-tap, microprocessor-controlled for tight voltage regulation, accuracy, and stability.
- Precisely maintains correct voltage to ± 3% within one cycle, and maintains regulation during extended brownouts.
- Low output impedance transformer minimizes voltage distortion and sags commonly associated with high surge currents.
- Triple-shielded isolation transformer provides a noise free ground, attenuates voltage spikes and transients, and re-establishes the N-G bond.
- Internal manual bypass option maintains system isolation, voltage transformation, and power conditioning.
- Superior compatibility with dynamic loads.
- Increased surge capability, without the need for automatic bypassing, provides full-time power conditioning.
- High-efficiency design results in lower operating cost.

© 2026 All rights reserved.

Product Specifications

- Input Operating Voltage Range: +10%, - 20% from nominal (Extended regulation range options available.)
- Input Frequency: 60 Hz, ± 3 Hz
- Input Power Factor: > .99 PF with resistive load
- Reflected Harmonics: Triplen harmonics are not reflected to the utility under non-linear loads
- Output Line Voltage Regulation: ± 3% from nominal
- Response Time: < 1/2 cycle
- Correction Time: 1 cycle
- Load Regulation: 2.5% typical, no load to full load
- Overload Rating: 200% for 10 seconds; 1000% for 1 cycle
- Noise Attenuation:

  Common Mode: 146 dB

  Transverse Mode: 3 dB down at 1 kHz; 40 dB down per decade to below 50 dB with a resistive load

- Transient Voltage Suppression: Meets ANSI C62.41 Category B-3
- Efficiency: 96% - 97% typical, model and load dependant

Line Voltage Regulation

Input Line Voltage: +10%, - 20%

Output Line Voltage: ± 3% typical

Extended Line Voltage Regulation

Optional Extended Range for Intermittent Duty only:

Input Line Voltage: +10%, - 40%

Output Line Voltage: + 5%, - 6% typical

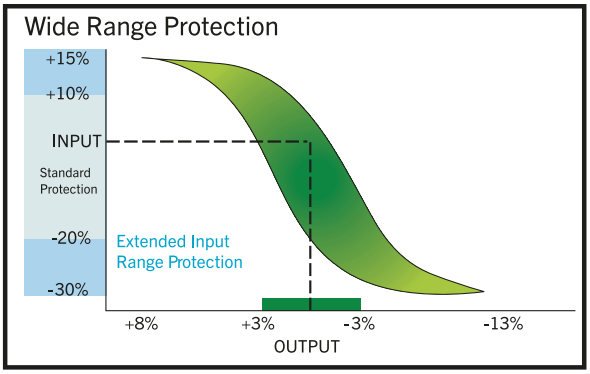

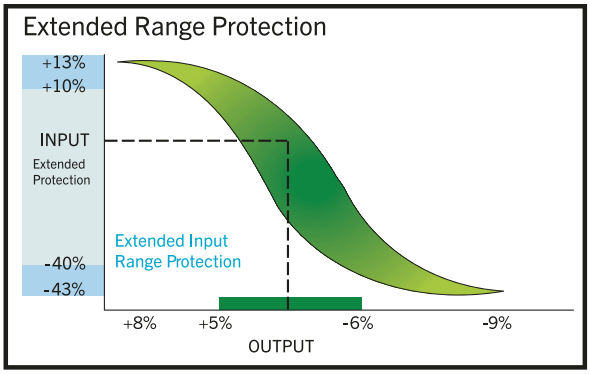

© 2026 All rights reserved.

RECEIVING, INSPECTING AND STORING THE UNIT

Note: Be sure to remove the front, back or side panels as required, and inspect the inside of the unit for shipping damage.

INSPECTING THE POWER PROCESSOR

Upon receipt of the unit, visually inspect for shipping damage. If any damage is found, the Purchaser must contact the Carrier immediately and file a shipping damage claim.

NOTE: Be sure to remove the front, back or side panels as required, and inspect the inside of the unit for shipping damage.

If any internal damage has occurred or any external damage that could affect the operation of the unit, please contact Trystar

IMPORTANT NOTICE

This shipment has been carefully inspected, checked and properly packaged at our company.

When it was delivered to the carrier it was in good condition and technically it became your property at that time. Thus, any damage, whether obvious or hidden, must be reported to the transportation company within FIVE days of receipt of the shipment at your premises to avoid forfeiting claims for damages.

FOR ALL SHIPMENTS DAMAGED IN TRANSIT

Leave the items, packing material and carton “AS IS”. Notify your carrier’s local office and ask for immediate inspection of the carton and contents.

After inspection has been made by the carrier, and you have received acknowledgment in writing as to the damage, notify our Customer Service Department to make any required repair arrangements.

It is your responsibility to follow the above instructions or the carrier will not honor any claims for damage. Also, if there are any shortages or questions regarding this shipment, please notify us within FIVE days.

Please note that we cannot be responsible for any service work or back-charges unless authorized by us in writing, before the work is performed.

STORING

If it is necessary to store the unit for a period of time before it is installed, be sure to place the unit in a clean, dry area. To prevent excessive dust from accumulating on the unit, it is advisable to protect it by replacing it in the original container (if possible). If the original container is not available it is recommended that all openings that lead internally into the unit are covered so that dust, water or any other substance cannot come in contact with the internal components of the system. The unit must be handled at all times with the same care you would give to any piece of precision industrial equipment.

© 2026 All rights reserved.

REMOVING THE UNIT FROM THE PALLET

REMOVING THE POWER PROCESSOR FROM PALLET

Please take special care when removing the unit from the pallet. Proper equipment must be used for lifting and moving, and all safety precautions should be taken. Each unit is bolted to a wooden pallet. In order to properly remove the cabinet from the pallet, all bolts connecting the unit to the pallet must be removed completely. The unit can then be lifted off the skid using a pallet jack or fork lift. When lifting the unit off of the pallet, be sure to take proper safety precautions. Serious injury and/or unit damage can result otherwise.

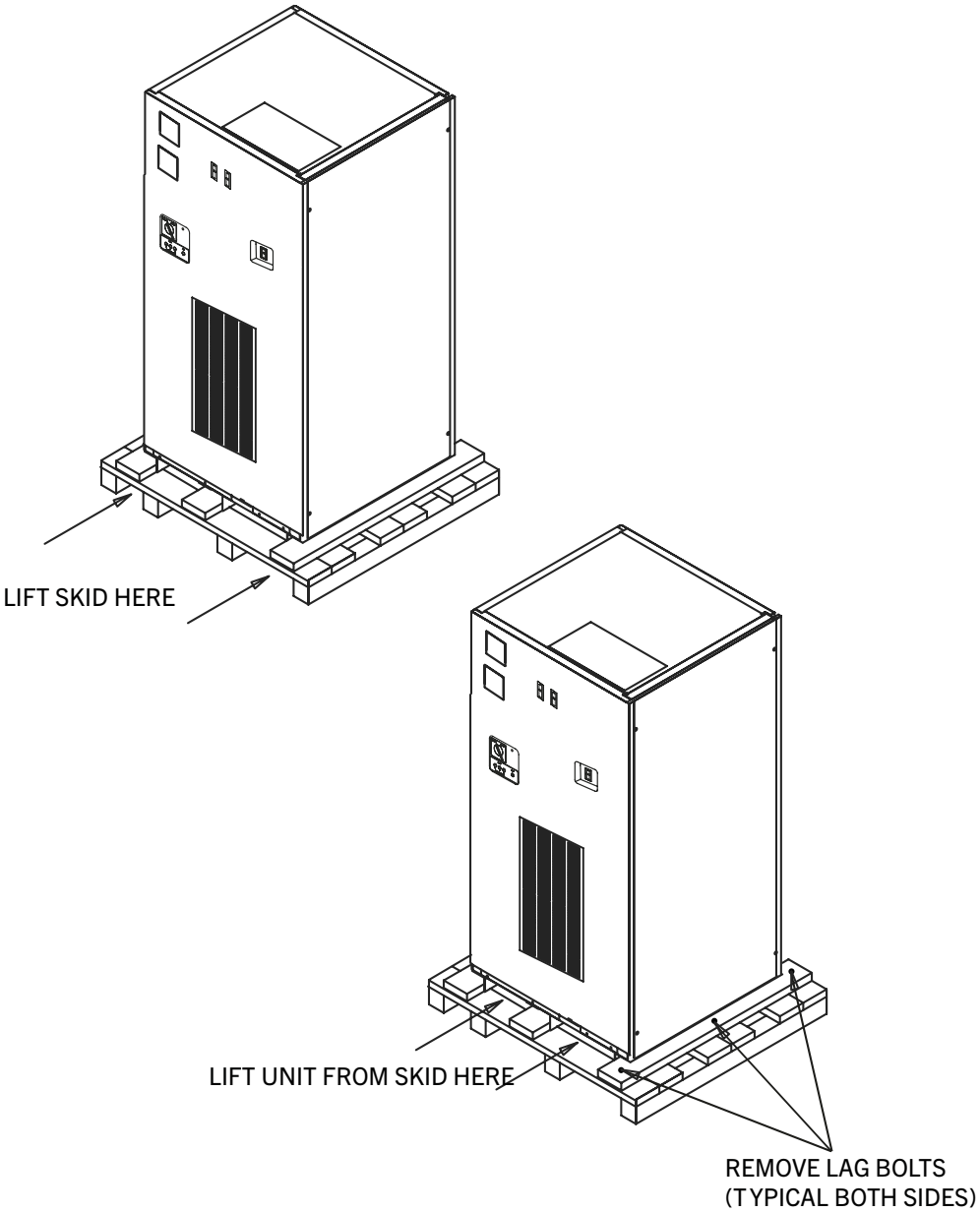

© 2026 All rights reserved.

SAFETY PRECAUTIONS

WARNING

THERE ARE DANGEROUSLY HIGH VOLTAGES PRESENT WITHIN THE ENCLOSURE OF THE POWER SUPPLY SYSTEM.

CAUTION MUST BE TAKEN WHEN WORKING WITH THE SYSTEM.

IT IS RECOMMENDED THAT ALL WORK BE PERFORMED BY QUALIFIED ELECTRICAL PERSONNEL ONLY.

CAUTION

RISK OF ELECTRICAL SHOCK AND HIGH SHORT CIRCUIT CURRENT. THE FOLLOWING PRECAUTIONS SHOULD BE OBSERVED WHEN WORKING ON THE UNIT:

1. REMOVE WATCHES, RINGS, OR OTHER METAL OBJECTS.
2. USE TOOLS WITH INSULATED HANDLES.
3. WEAR RUBBER GLOVES AND BOOTS.

CAUTION

- FOLLOW ALL STANDARD AND LOCAL ELECTRICAL CODES.
- DO NOT ALLOW WATER OR FOREIGN OBJECTS TO GET INSIDE THE UNIT.
- DO NOT PLACE OBJECTS OR LIQUIDS ON TOP OF THE UNIT.
- DO NOT LOCATE THE UNIT NEAR RUNNING WATER.

© 2026 All rights reserved.

PRELIMINARY INSTALLATION

INSTALLATION CONSIDERATIONS

Prior to installing the Series 700F, be sure to take into consideration the installation site you have selected. Power Processors produce heat and therefore require ventilation as well as accessibility. Consider these factors:

- Ventilation
- Size of the Power Processor
- Weight Load
- Audible Noise Requirements
- Remote Emergency Power Off (Repo)
- Monitors
- Options
- Clean Environment
- Input Source Voltage
- Receiving Facilities
- Distribution of Power
- Room Temperature
- Clearances
- Accessibility
- Excessively Long Power Runs
- Proper Ground Techniques

© 2026 All rights reserved.

CHOICE OF LOCATION

The unit has been completely inspected and extensively tested under various load conditions prior to shipment. Care to install it at a proper location will assure long trouble-free operation.

The unit is air cooled with the air intake at the bottom and exhausts at the top, front or at the sides. Therefore, it should be installed in a clean, dry place with enough clearance to allow a free flow of air. No clearance is required at the left, right or rear sides of the unit and the wall or other equipment. Allow at least 36 inches of space for maintenance at the front of the unit. Allow at least 24" of space at the top of the unit for air flow. (See *"Installation - Cabinet Clearances, Input/Output Terminal Location and Conduit Entry Locations" or "Appendix A - Cabinet Outline"*)

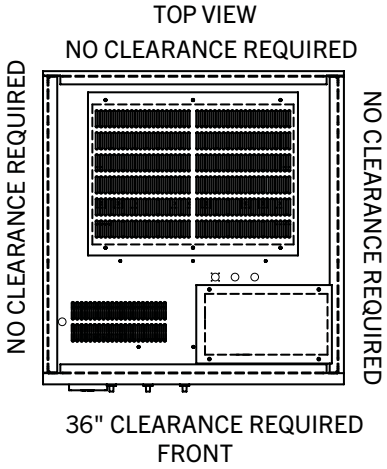

NOMINAL INPUT CURRENT AT VARIOUS INPUT VOLTAGES								
MODEL	INPUT VOLTAGE							
	208V	208V INPUT BREAKER SIZE	240V	240V INPUT BREAKER SIZE	480V	480V INPUT BREAKER SIZE	600V	600V INPUT BREAKER SIZE
125KVA	364A	500A	316A	400A	158A	200A	126A	175A

NOMINAL OUTPUT CURRENT AT VARIOUS OUTPUT VOLTAGES			
MODEL	OUTPUT VOLTAGE		
	208/120V	400/230V	480/277V
125KVA	347A	180A	150A
If unit is provide with no output circuit breaker option, output over-current protection and a disconnect device (circuit breaker) shall be provided by others.			

WEIGHT, DIMENSIONS AND BTU's				
MODEL	OUTPUT VOLTAGE	FULL LOAD BTU's / HR	DIMENSIONS	WEIGHT (LBS.)
125KVA	125	17,050	34.5"W X 36"D X 76"H	2,137
Stated BTU's / Hr. is at 100% rated load, 100% duty cycle.				

© 2026 All rights reserved.

The unit is constructed using an isolation transformer and is considered to be a “separately derived system” It should be grounded in accordance with the NFPA 70 article 250.20 “Alternating-Current Circuits and Systems to Be Grounded”, article 250.20(D) “Separately Derived Systems” and article 250.30 “Grounding Separately Derived Alternating-Current Systems”

REFER TO THE LATEST EDITION OF THE NATIONAL ELECTRIC CODE REQUIREMENTS FOR OVER-CURRENT PROTECTION AND WIRE SIZING.

CAUTION

To reduce the risk of fire, use only on circuits provided with ampere branch circuit protection, in accordance with the National Electric Code, ANSI/NFPA 70.

INSTALLATION

OPTION WIRING SHOULD BE DONE PRIOR TO CONNECTING PRIMARY INPUT AND OUTPUT POWER LINES

Before installing the Power Processor make sure that the input voltage and the output voltages match the unit’s specification plate.

INPUT WIRE SIZE, GROUNDING AND OUTPUT WIRING

A. Conduit should be used for both input and output wiring.

B. Input wire ampacity is specified in NEC table 310.15(B)(16). Specifying not more than 3 connections in a raceway based on an ambient of 30°C and wire rated for 90°C (Note: amperages will need to be adjusted for 40° C ambient applications). Ground wire sizing is specified in NEC table 250.122.

C. Input phase conductors are terminated directly to the input circuit breaker terminals. Wire range:

© 2026 All rights reserved.

Input Voltage	Input Circuit Breaker	Wire Range
600 VAC	175 Amp breaker	4awg - 4/0
480 VAC	200 Amp breaker	3/0 - 350kcmil
240 VAC	400 Amp breaker	2awg - 600kcmil
208 VAC	500 Amp breaker	(2) 2/0awg - 350kcmil

D. Input Ground - An ILSCO TA-250 terminal allows wire sizes from 6awg - 250mcm.

E. Output is a 4 wire (5 including ground). If four (4) current carrying conductors are used in a raceway the neutral is assumed to be current carrying and the wire must be de-rated as indicated in the 2011 NEC table 310.15(B)

Example:

1. Assume #10 wire max current = 25 Amps.
2. Multiply 25 x .8 = 20
3. 20 Amps is max current for #10 wire in a raceway with 4 conductors.

Note: Installation is subject to local codes - verify with a local electrical inspector.

NOTE: Installation is subject to local codes - verify with a local electrical inspector.

F. All output ground and neutral terminals are copper bus bars with two holes. Double bolted lug are recommended. Manufactured by BurndyBurndy

RECOMMENDED LUGS: Double bolted type as supplied by Burndy Copper Compression lug, 2 hole Type YA,¼" stud, ¾" spacing.

YA6CL-2TC14E2 #6 wire
YA4CL-2TC14E2 #4 wire
YA2CL-2TC14E2 #2 wire
YA1CL-2TC14E2 #1 wire
YA25L-2TC14E2 #1/0 wire
YA26L-2TC14E2 #2/0 wire
YA27L-2TC14E2 #3/0 wire
YA28L-2TC14E2 #4/0 wire X 2

Output connections are made directly to the output bus and/or to the load side (bottom) of the optional output circuit breakers provided (refer to the units output breakers for proper lug wire range sizes). Output neutral and ground bus are also provided *(See "Installation - Cabinet Clearances, Input/Output Terminal Location and Conduit Entry Locations" or "Appendix A - Cabinet Outline" for bus locations).* The load current is not to exceed 80% of the output breaker(s) rating, and not to exceed the rated total current.

G. Output neutral to ground bonded during manufacturing of the Power Processor. Output neutral is already grounded by the factory.

H. Installation is subject to local codes. Verify with a local electrical inspector.

© 2026 All rights reserved.

CABINET CLEARANCES, INPUT / OUTPUT TERMINAL LOCATION AND CONDUIT ENTRY LOCATIONS

1. Input and output terminals are located at the front of the unit.
2. To access terminal blocks, remove conduit panels and any other panels necessary on the front of the unit.
3. Wire accordingly. The terminals will be clearly marked. If there are any discrepancies refer to the schematic which accompanies the unit.

The unit is air cooled with the air intake at the front and exhausts at the top. Therefore, it should be installed in a clean, dry place with enough clearance to allow a free flow of air. Allow at least 36 inches of space at the front of the unit for serviceability. No clearance is required at the rear, left or right sides of the unit.

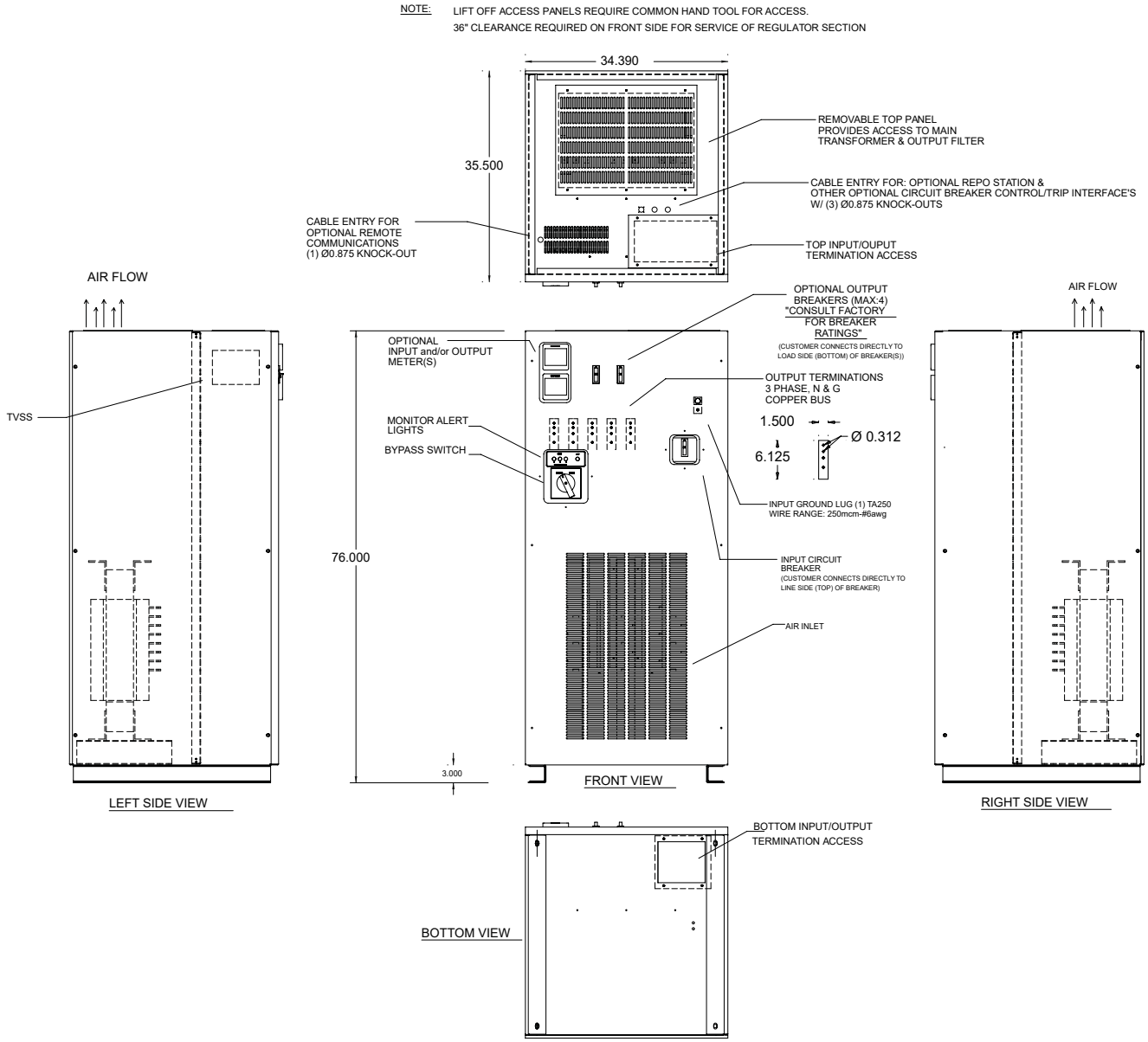

© 2026 All rights reserved.

INPUT & OUTPUT CONNECTIONS

OPTION WIRING SHOULD BE DONE PRIOR TO CONNECTING PRIMARY INPUT AND OUTPUT POWER LINES

1. Input connections are made directly to the unit's 3 pole main input circuit breaker and input ground lug provided. Note the bottom access wire run route illustrated below.
2. Output connections are made directly to the output bus terminations or optional output breakers, output neutral and ground bus terminations are also provided. The load current is not to exceed 80% of the output breaker(s) rating, and not to exceed the rated total current.

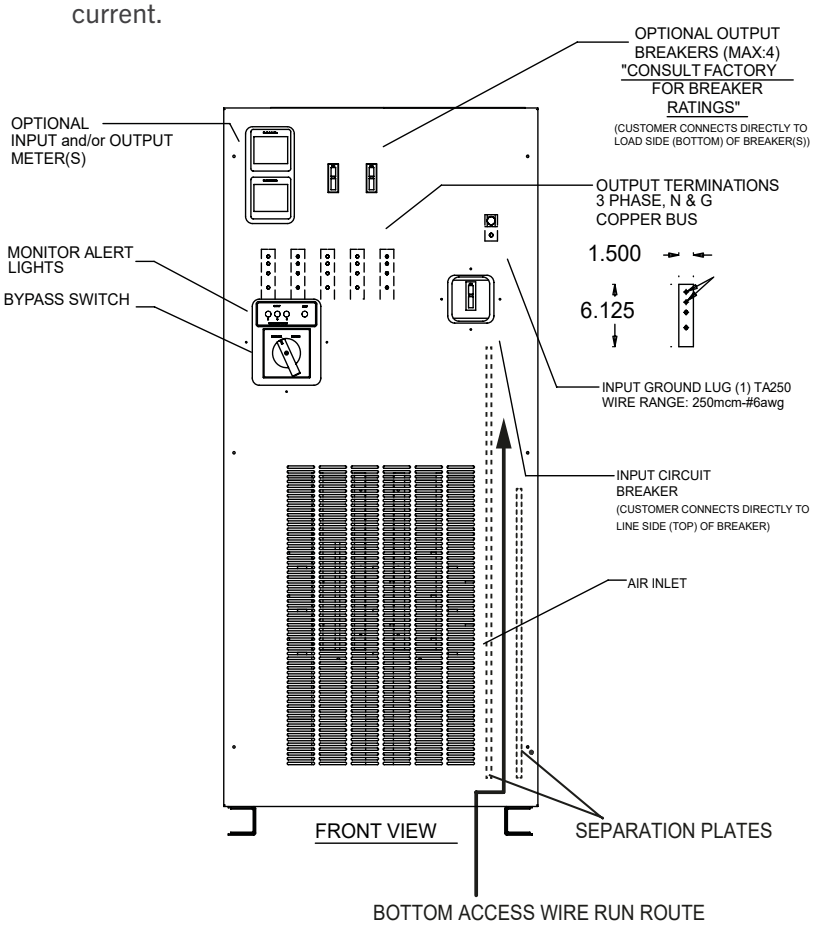

A maximum quantity of four (4), 3 phase main output CBs, ranging from 15A to 250A, are available as options. All main output Circuit Breaker selections are 600VAC rated, 25kAIC @ 208VAC, and 18kAIC @ 480VAC.

125KVA Max circuit breaker ratings:
200A Circuit Breaker - 480V output
250A Circuit Breaker - 208V output
450A Circuit Breaker - 208V output*

*One (1) output circuit breaker only at 208VAC

© 2026 All rights reserved.

OPTION INSTALLATION

OPTION DESCRIPTION AND INSTALLATION

OPTION WIRING SHOULD BE DONE PRIOR TO CONNECTING PRIMARY INPUT AND OUTPUT POWER LINES

UOV2020 UNDER/OVER VOLTAGE SHUTOFF

When the output voltage goes above or below the preset value, the unit electronically shuts off. The preset voltages can be set from 75% of nominal up to 115% of nominal. It does not trip the main breaker; however, the system is reset by cycling the input breaker. The under/over ranges can be adjusted as required. Factory installed and set, there is no external wiring or set up required for this option.

PSO2020 UNDER/OVER VOLTAGE AND LOSS OF POWER TRIP

When the output voltage goes above or below the preset value or detects a loss of power, the shunt trip coil is energized, which in turn shuts off the main breaker. The preset voltages can be set from 75% of nominal up to 115% of nominal. The circuit breaker must be reset manually. Includes shunt trip breaker. The under/over ranges can be adjusted as required. Factory installed and set, there is no external wiring or set up required for this option.

REP2020 REMOTE EMERGENCY POWER OFF (REPO)

Consists of a guarded “Emergency OFF” button which when depressed, will shunt trip the input circuit breaker of the Power Processor. The REPO station can be remotely located. Supplied with 50 ft. cable and 24VDC shunt trip breaker. The main circuit breaker must be manually reset to re-energize the system. Connect the REPO assembly to the provided connector on the top of the unit as shown below.

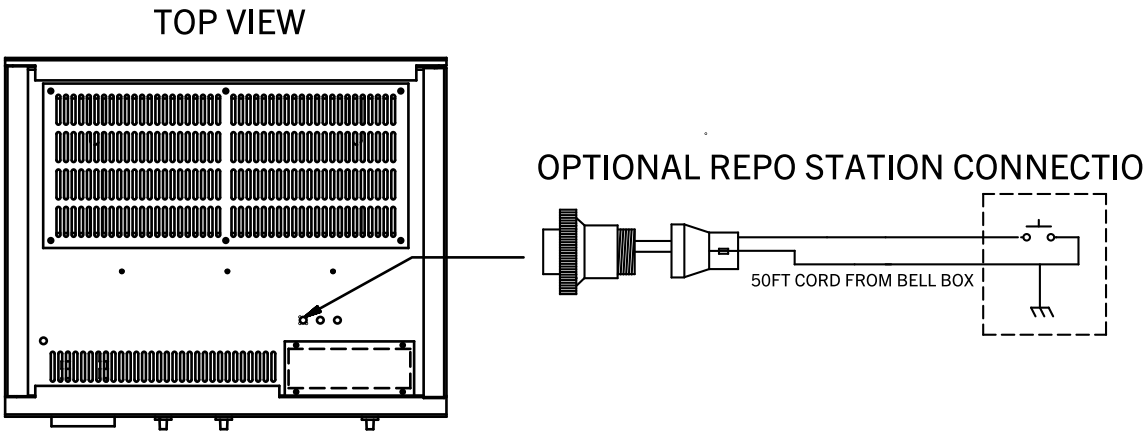

© 2026 All rights reserved.

UVR2020-24 24VDC UNDER VOLTAGE / LOSS OF POWER TRIP

Adds to the main input circuit breaker; consisting of 24VDC under voltage coil solenoid. Instantaneously opens the circuit breaker when the under-voltage trip supply voltage drops to a value between 35% and 70% of its rated voltage. A manual reset is required. The input circuit breaker may be closed when the supply voltage of the under-voltage trip reaches 85% of rated voltage. 24VDC supplied by customer. Refer to the drawing below and the circuit diagram supplied with the unit for wiring instructions.

UVR2020-120 120VAC UNDER VOLTAGE / LOSS OF POWER TRIP

Adds to the main input circuit breaker; consisting of 120VAC under voltage coil solenoid. Instantaneously opens the circuit breaker when the under-voltage trip supply voltage drops to a value between 35% and 70% of its rated voltage. A manual reset is required. The input circuit breaker may be closed when the supply voltage of the undervoltage trip reaches 85% of rated voltage. 120VAC supplied by customer. Refer to the drawing below and the circuit diagram supplied with the unit for wiring instructions.

STC2020-24 SHUNT TRIP

Adds to the main input circuit breaker; consisting of 24VDC shunt trip coil solenoid. When the shunt trip coil is energized, the main input circuit breaker is de-energized. A manual reset is required. 24VDC supplied by customer. Refer to the drawing below and the circuit diagram supplied with the unit for wiring instructions.

STC2020-120 SHUNT TRIP

Adds to the main input circuit breaker; consisting of 120VAC shunt trip coil solenoid. When the shunt trip coil is energized, the main input circuit breaker is de-energized. A manual reset is required. 120VAC supplied by customer. Refer to the drawing below and the circuit diagram supplied with the unit for wiring instructions.

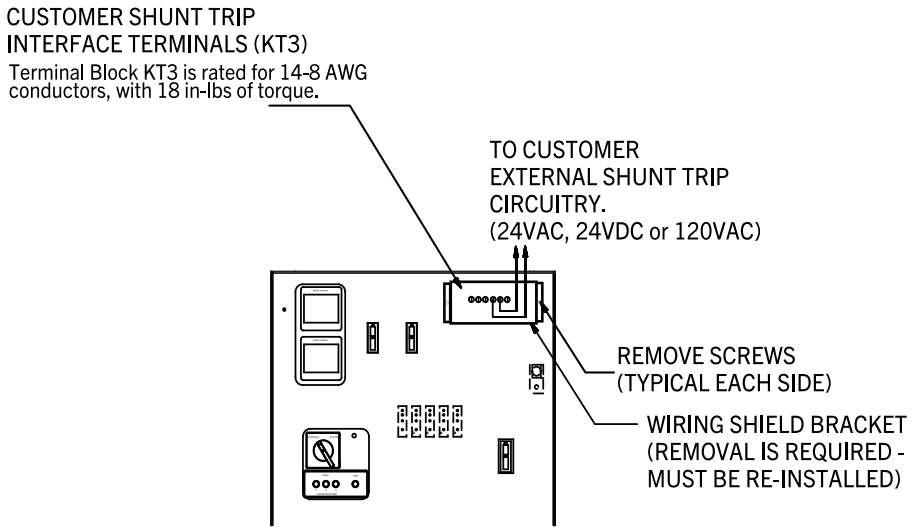

© 2026 All rights reserved.

RBS2020 REGULATOR BYPASS SWITCH

The Power Processor has a main isolation transformer and regulator. This option bypasses the regulator portion of the Power Processor. The bypassing is done by manually setting the switch when the power is **OFF**. Factory installed, there is no external wiring or set up required for this option. See *"Bypass Operation and Monitoring"* for proper use.

RBS2020 REGULATOR BYPASS SWITCH

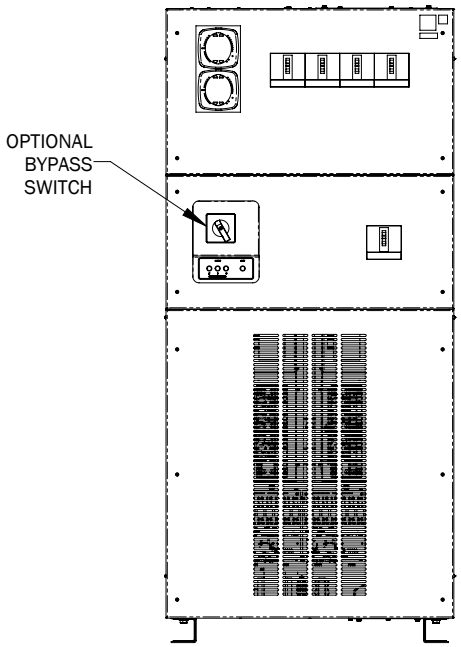

OPTION WIRING SHOULD BE DONE PRIOR TO CONNECTING PRIMARY INPUT AND OUTPUT POWER LINES

ERR1040 EXTENDED REGULATION RANGE 1040

Provides +10% -40% voltage regulation range for intermittent duty only. Output Regulation +5%, -6%. Note: Extended operation at voltages below -20% may cause the main input circuit breaker to trip on the thermal overload. Factory installed, there is no external wiring or set up required for this option.

ERR2020 EXTENDED REGULATION RANGE 2020

Provides +20% -20% voltage regulation range for intermittent duty only. Output Regulation +/- 5%. Note: Extended operation at voltages below -20% may cause the main input circuit breaker to trip on the thermal overload. Factory installed, there is no external wiring or set up required for this option.

ERR2030 EXTENDED REGULATION RANGE 2030

Provides +20% -30% voltage regulation range for intermittent duty only. Output Regulation +5, -6%. Note: Extendedoperation main input circuit

© 2026 All rights reserved.

at voltages below -20% may cause the breaker to trip on the thermal installed, there is no external wiring or set up required for this option.

ERR1525 EXTENDED REGULATION RANGE 1525

Provides +15% -25% voltage regulation range for intermittent duty only. Output Regulation +5%, -6%. Note: Extended operation at voltages below -20% may cause the main input circuit breaker to trip on the thermal overload. Factory installed, there is no external wiring or set up required for this option.

IOR100 INPUT OUT OF RANGE INDICATORS

Input “Out of Range” red indicating LEDs illuminate if the input voltage is out of the range of the regulator. If any phase of the input voltage source exceeds the specified +10%, -20% from nominal, the appropriate phase LED will illuminate. Factory installed and set, there is no external wiring or set up required for this option.

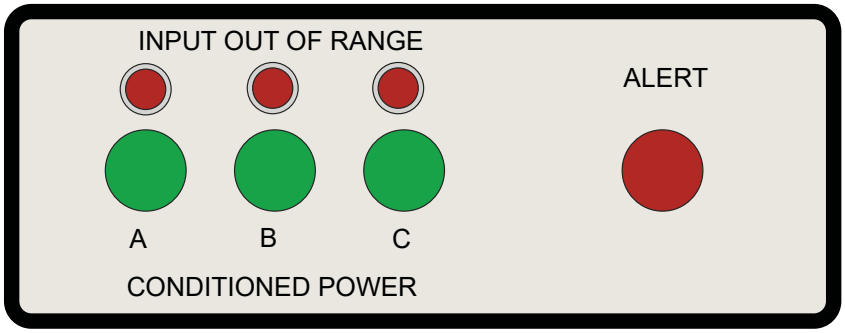

SHARK100V1 THREE PHASE METER

Digitally displays the output voltages L-L, L-N, and output currents. Factory installed and set, there is no external wiring or set up required for this option. For function and use, see the monitor manual supplied with the Power Processor.

SHARK100V4 THREE PHASE METER

Digitally displays Voltage, Current, kVA, kVAh, kW, kWh, kVARs, kVARh, power factor, frequency, % THD, % load bar, with limits exceeded alarm. Includes RS485 communication using MODBUS or DNP 3.0 protocols. Meter can be provided on the input and/or output.

For function and use, see the monitor manual supplied with the Power Processor.

SHARK200V4 ADVANCED THREE PHASE METER

Digitally displays Voltage, Current, kVA, kVAh, kW, kWh, kVARs, kVARh, power factor, frequency, % THD, % load bar, plus data-logging with time stamp and programmable limit alarms on all measured parameters. Features a waveform scope to view the real-time waveform for voltage and current. Includes RS485 communication using MODBUS or DNP 3.0 protocols. Meter can be provided on the input and/or output.

For function and use, see the monitor manual supplied with the Power Processor.

© 2026 All rights reserved.

SHARK200V6 ADVANCED THREE PHASE METER WITH POWER QUALITY MONITORING

Same features as the Shark200V4, plus power quality monitoring with event logging, advanced harmonic analysis, and a 512 samples per cycle waveform recorder. Meter can be provided on the input and/or output.

For function and use, see the monitor manual supplied with the Power Processor.

OPTIONAL COMMUNICATIONS CAPABILITY ON SHARK200V4 AND SHARK200V6 (SELECT UP TO 2)

INP100S - Ethernet TCP / IP and MODBUS TCP Web Card

RO1S - Form C Relay Contacts Board, 2 inputs/outputs

20mAOS - 4 channel 4-20mA Current Outputs

For function and use, see the monitor manual supplied with the Power Processor.

© 2026 All rights reserved.

BYPASS OPERATION AND MONITORING

CAUTION

PRIOR TO SWITCHING FROM ONE POSITION TO ANOTHER - TURN OFF THE AC INPUT BREAKER. FAILURE TO DO SO WILL RESULT IN SERIOUS DAMAGE TO THE POWER PROCESSOR.

BYPASS SWITCH

The manual by-pass switch is a break before make switch located on the front of the Model 700F. The manual bypass switch is used to bypass all power electronics in case of failure.

NORMAL MODE

With the switch in the normal position, the Model 700F will provide clean and regulated power to the critical loads. The Model 700F should have the switch in the normal position unless a failure has occurred.

BYPASS MODE

A manually operated rotary bypass switch bypasses the regulator portion of the system. The transformer and suppression circuitry remains in the circuit when in the bypass mode. When the switch is in the bypass position, the Model 700F will provide clean power to the critical loads. In the bypass position, the unit will not regulate the incoming voltage. The Model 700F should be placed in the bypass position if a failure of the system has occurred. This provides the loads with some protection until a service technician arrives.

STANDARD MONITORING

Overtemp sensing devices are mounted at critical points on the SCR regulating assembly and the main transformer. If an overtemp condition exists the unit will electronically shut off, however, the cooling fans will continue to operate. The “ALERT” light will illuminate and hold until the overtemp is corrected. The main AC input breaker must be turned off in order to reset the “ALERT” light.

ALERT LIGHT - An indicator light indicates if the output has been disabled by one of the following conditions:

1. Transformer over-temperature
2. SCR thermal over-temperature

INDICATING LAMPS - Output ON indicating lamps are provided for each phase.

INPUT OUT OF RANGE INDICATORS

Input “Out of Range” red indicating LEDs illuminate if the input voltage is out of the range of the regulator. If any phase of the input voltage source exceeds the specified +10%, -20% from nominal, the appropriate phase

© 2026 All rights reserved.

LED will illuminate. Factory installed and set, there is no external wiring or set up required for this option.

OPTIONAL MONITORING

SHARK100V4, SHARK200V4 AND SHARK200V6

For function and use, see the monitor manual supplied with the Power Processor.

START-UP

WARNING

THERE ARE DANGEROUSLY HIGH VOLTAGES PRESENT WITHIN THE ENCLOSURE OF THE POWER SUPPLY SYSTEM. CAUTION MUST BE TAKEN WHEN WORKING WITH THE ENCLOSURE. IT IS RECOMMENDED THAT ALL WORK BE PERFORMED BY QUALIFIED ELECTRICAL PERSONNEL ONLY.

NOTE: INITIAL START-UP SHOULD BE PERFORMED WITH NO LOAD ON SYSTEM.

1. Re-install all panels that may have been removed during installation.
2. Make sure the input circuit breaker is in the **off** position.
3. Energize the primary building power.
4. Turn on the main AC input breaker.
5. Verify that the output voltage is within the specified range.
6. Verify output phase rotation is correct.
7. Turn the system off.
8. Connect the loads one at a time and repeat Step 4.

© 2026 All rights reserved.

PREVENTIVE MAINTENANCE

WARNING

DANGER OF ELECTRICAL SHOCK, TURN OFF ALL POWER SUPPLYING THIS EQUIPMENT PRIOR TO MAINTENANCE.

WARNING

THERE ARE DANGEROUSLY HIGH VOLTAGES PRESENT WITHIN THE ENCLOSURE OF THE POWER SUPPLY SYSTEM. CAUTION MUST BE TAKEN WHEN WORKING WITH THE ENCLOSURE. IT IS RECOMMENDED THAT ALL WORK BE PERFORMED BY QUALIFIED ELECTRICAL PERSONNEL ONLY.

To ensure longer component life and trouble-free operation, minor preventive maintenance procedures should be performed at regular intervals, for example once every year. More frequent inspection intervals would be needed for more severe operating conditions and larger number of hours of continuous operation.

A. Remove the required panels and at each service inspection any accumulated dust, dirt or foreign particles should be carefully removed. Special care should be exercised in cleaning the SCR's (power mods), heatsinks and the control assembly.

B. Inverse Parallel Silicon Rectifiers (SCR's or Power Mods)

The silicon controlled rectifiers (SCR's) usually fail in the shorted mode. When this happens, normally the fusible link (were applicable) in series with the SCR will be blown open to clear the short and prevent damage to the transformer(s). The individual SCR can be checked with an ohmmeter.

C. A simple performance checklist has been developed for use in maintenance. See "Performance Checklist" and check off items 1-7.

D. After items 1-7 have been checked on the "Performance Checklist", the next step is to check the operation of the system.

E. Replace any panels that were previously removed. Turn the unit on with no load. Check item 8 on the performance checklist.

F. Turn on loads and check items 9-10 of the "*Performance Checklist*".

G. Check to make sure all fans are operational.

NOTE: Preventive Maintenance Plans are available. Please contact the Customer Support Group for information.

Note: Preventive Maintenance Plans are available. Please contact the Customer Support Group for information.

© 2026 All rights reserved.

PERFORMANCE CHECKLIST

Company_____

Model #_____Serial #_____

1. Customer Comments or Problems_____
2. Power Processor Environment Clean and Dust Free Yes_____ No_____
3. Phase Rotation Correct (ABC) Yes_____ No_____
4. Electrically wired properly ie...Conductor Sizing, Breakers, Grounding
5. Verify Input Voltage (See specification tag)
6. Check Tightness of Electrical Connections:

   _____Input Connections_____Output Connections_____Heatsink Connections (SCR's)

   _____Circuit Board Connections_____By-Pass Switch_____Fuse Connections

   _____Fan Connections_____Transformer Connections
7. Exercise all circuit breakers-

   _____Input Breaker_____Output Breakers
8. Input/Output Voltage Checks (Adjust as Needed).

No Load Input		No Load Output	
A-B_____VAC	_____	A-N_____VAC	A-B_____VAC
B-C_____VAC	_____	B-N_____VAC	B-C_____VAC
A-C_____VAC	_____	C-N_____VAC	A-C_____VAC

9.

Available Load Input		Available Load Output	
A-B_____VAC	_____	A-N_____VAC	A-B_____VAC
B-C_____VAC	_____	B-N_____VAC	B-C_____VAC
A-C_____VAC	_____	C-N_____VAC	A-C_____VAC

10. Input/Output Current Checks (Balance as Needed).

Input	Output
A_____Amps	A_____Amps
B_____Amps	B_____Amps
C_____Amps	C_____Amps
	N_____Amps
	G_____Amps

11. Fans Operational_____

© 2026 All rights reserved.

GENERAL TROUBLESHOOTING

WARNING

THERE ARE DANGEROUSLY HIGH VOLTAGES PRESENT WITHIN THE ENCLOSURE OF THE POWER SUPPLY SYSTEM. CAUTION MUST BE TAKEN WHEN WORKING WITH THE ENCLOSURE. IT IS RECOMMENDED THAT ALL WORK BE PERFORMED BY QUALIFIED ELECTRICAL PERSONNEL ONLY.

SYMPTOM	PROBABLE CAUSES
1. No Output on One or More Phases.	A. No Input.
	B. Blown Fuse.
	C. Defective SCR or Power Mod.
	D. Defective Control Card.
	E. Defective Sense Card.
	F. Defective Over/Under Output Detection (Optional)
2. Output is too High or too Low.	A. Input Out of Range.
	B. Control Card Adjustment.
	C. Defective Control Card.
	D. Defective Sense Card.
	E. Defective SCR or Power Mod.
3. Input Breaker Tripping Off.	A. System Overloaded.
	B. Defective Breaker.
	C. Shorted Taps.
4. Blowing Semi-Conductor Fuses	A. Shorted SCR’s or Power Modules.
	B. Output Loads Shorted.

© 2026 All rights reserved.

WARRANTY

This Warranty applies only to the original purchaser who must properly register the product within thirty (30) days of receipt.

https://www.trystar.com/services/warranty-information/

Trystar warrants that our products and their components will remain free from defects in material and workmanship for the duration of the respective warranty period* from the date of shipment and agrees to replace, F.O.B. its factory, any parts which fault through defect in material or workmanship during such period. Non payment for the product to either the reseller, rep, distributor or the factory direct will result in revocation of warranty, technical support and service contracts. **Warranty begins from date of shipment unless a factory start-up is purchased, then the warranty begins from date of Start-up or 90 days from ship date; whichever comes first.**

If a Start-Up is purchased with the unit(s) or within 30 days from original ship date, the 1st year warranty is upgraded to include onsite labor and expenses during normal business hours (Monday - Friday, 8AM - 4PM). Start-up includes all travel and living expenses. Start-up description: Testing all emergency circuitry - Calibration - Inspection - Exercising all circuit breakers - Cooling fan check - Input and output parameter check - Air intake / exhaust check - Re-torque all high current terminals - Input/ Output verification - Written report. User training to be done at time of start-up (no return visits). Product installation is required to be complete before start-up can be scheduled.

Products:

- Power Processor (700F) / 1 Year parts only.*

* From original shipment date / Excludes on site labor and expenses unless otherwise noted.

---

1. This Warranty shall be effective only if and so long as the system is installed and operated in the manner specified in the manual which accompanied the product, and is operated within the ratings on the nameplate of the system.
2. This Warranty shall be effective provided the purchaser pays the cost of transporting the faulty component(s) to and from Trystar's factory at the purchaser's own expense, unless the item covered under service contract with Trystar. There is no cost for installation of the replacement component(s) when done at the factory. Otherwise installation of the replacement component(s) are the responsibility of the purchaser, unless the item is covered under service contract with Trystar. If after inspection the faulty component has been caused by misuse or abnormal conditions in the judgment of Trystar Company, the purchaser will be charged for repairs based on parts and labor required. This Warranty does not cover fuses, light bulbs, and

© 2026 All rights reserved.

other normally expendable items. Trystar service personnel are not included in this warranty unless covered by a Trystar service contract.

3. This Warranty shall be void if any alteration is made to the system, or any of its components are altered by anyone other than an authorized Trystar service person, without the written permission of Trystar.
4. This Warranty is in lieu of all other warranties, expressed or implied. Trystar neither assumes, nor authorizes any person to assume for it, any liability other than that specifically set forth in this Warranty. Except for its obligations, Trystar assumes no liability or responsibility for personal injury, loss of life, consequential or other damages resulting from defects in, or failure of, the system or any of its components.

© 2026 All rights reserved.

CUSTOMER SUPPORT

SERIES 700F POWER PROCESSOR PRODUCT SUPPORT SERVICES

Contact Trystar.

TRYSTAR NATIONWIDE CUSTOMER SUPPORT

Trystar offers total customer support that assures your critical equipment is maintained properly for trouble-free operation.

WHAT A CUSTOMER SUPPORT PLAN OFFERS

HOT LINE: Call 24 Hours 507-333-3990

RESPONSE TIME: Immediate 24 hour phone support. If problem is not solved, we will make every effort to have your system running within 48 hours.

START-UP*: On site start-up assures equipment is installed and operating properly. *Start-up may be substituted for preventive maintenance on new units.

FIELD REPAIRS: Customer Support Plans cover parts, labor, travel, living and freight expenses.

PREVENTIVE MAINTENANCE: Optional scheduled preventive maintenance includes the following:

- Inspection
- Exercising all circuit breakers.
- Re-torquing all high current terminals and connectors.
- Testing all emergency circuitry.
- Calibration
- Clean internal and external
- Verify Cooling System
- Written Report

PLAN	ON SITE COVERAGE	PARTS COVERED	FIELD REPAIR LABOR COVERED	FACTORY REPAIR LABOR COVERED	FREIGHT COVERED	TRAVEL EXPENSES COVERED
SILVER	NONE	YES	NO	YES	NO	NO
GOLD	M-F 8AM-4PM	YES	YES	YES	YES	YES
PLATINUM	24-7	YES	YES	YES	YES	YES

© 2026 All rights reserved.

APPENDIX A

RELATIVE DRAWINGS

© 2026 All rights reserved.

CABINET OUTLINE

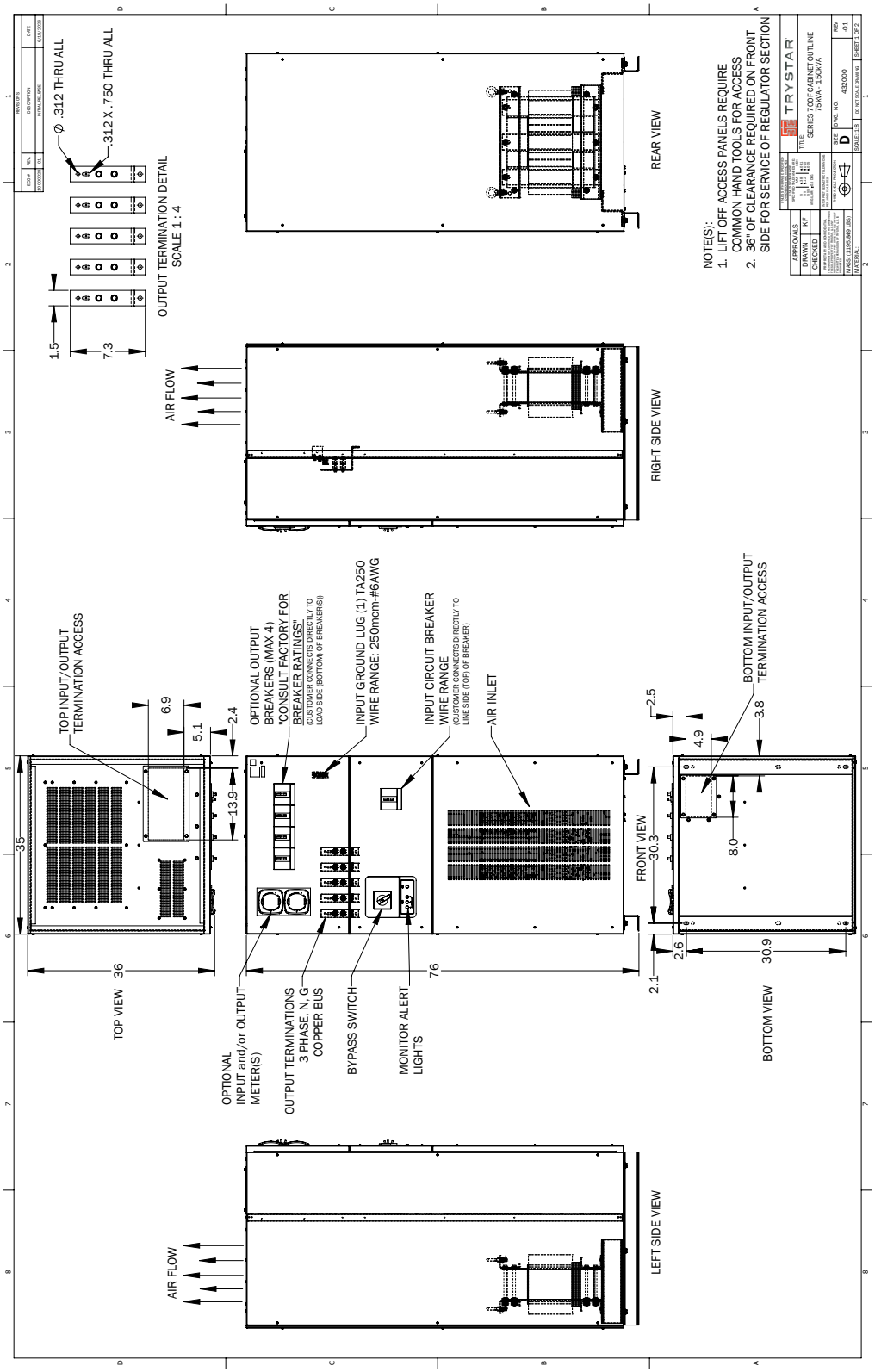

© 2026 All rights reserved.

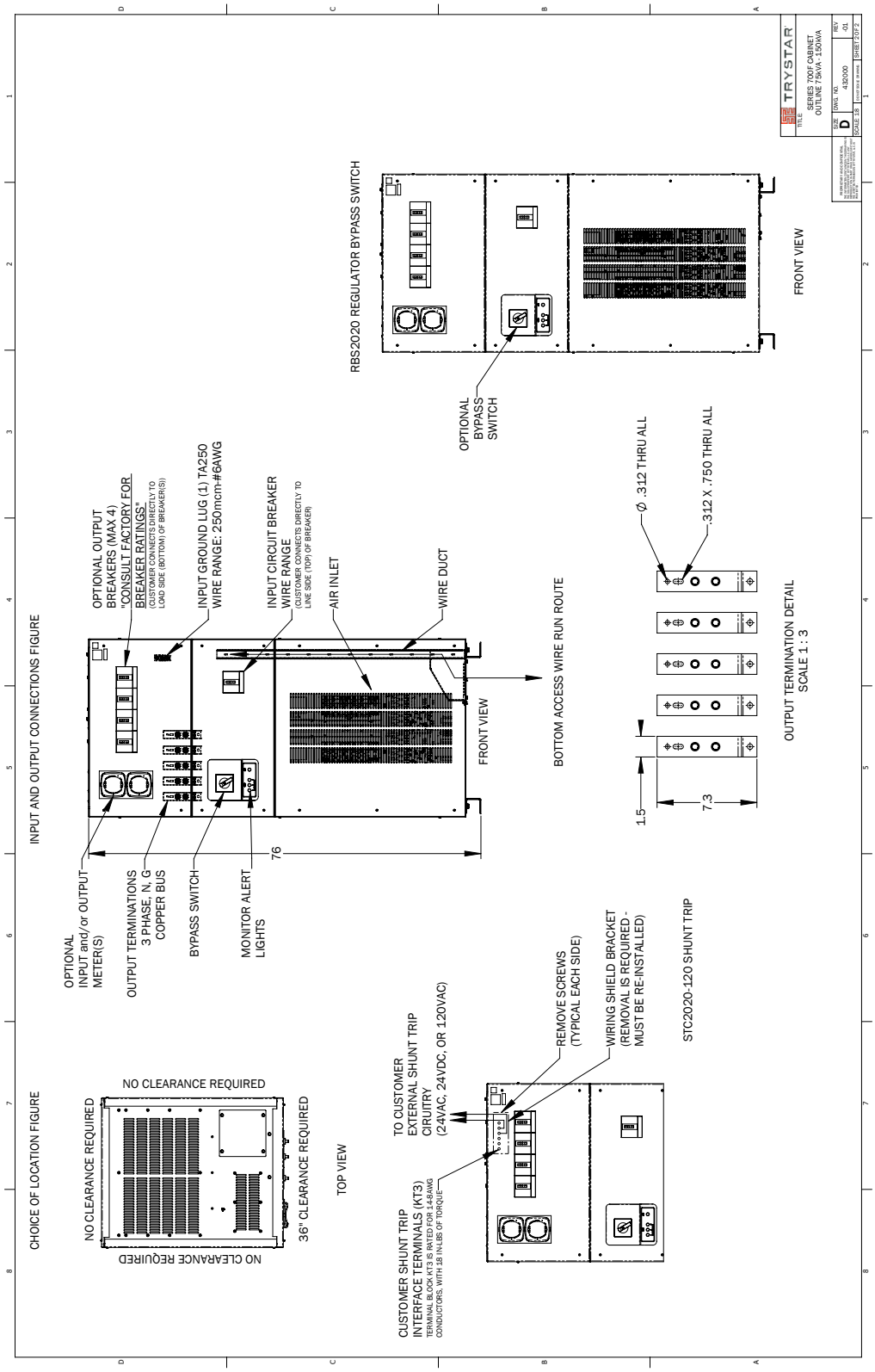
INPUT AND OUTPUT CONNECTIONS FIGURE
OPTIONAL OUTPUT BREAKERS (MAX 4) "CONSULT FACTORY FOR BREAKER RATINGS"
(CUSTOMER CONNECTS DIRECTLY TO LOAD SIDE (BOTTOM) OF BREAKER(S))
INPUT GROUND LUG (1) TA250 WIRE RANGE: 250mcm-#6AWG
INPUT CIRCUIT BREAKER WIRE RANGE
(CUSTOMER CONNECTS DIRECTLY TO LINE SIDE (TOP) OF BREAKER)
AIR INLET
WIRE DUCT
FRONT VIEW
BOTTOM ACCESS WIRE RUN ROUTE
76
OPTIONAL INPUT and/or OUTPUT METER(S)
OUTPUT TERMINATIONS 3 PHASE, N, G COPPER BUS
BYPASS SWITCH
MONITOR ALERT LIGHTS
RBS2020 REGULATOR BYPASS SWITCH
OPTIONAL BYPASS SWITCH
FRONT VIEW
Ø .312 THRU ALL
.312 X .750 THRU ALL
1.5
7.3
OUTPUT TERMINATION DETAIL
SCALE 1 : 3
CHOICE OF LOCATION FIGURE
NO CLEARANCE REQUIRED
NO CLEARANCE REQUIRED
36" CLEARANCE REQUIRED
NO CLEARANCE REQUIRED
TOP VIEW
TO CUSTOMER EXTERNAL SHUNT TRIP CIRUITRY (24VAC, 24VDC, OR 120VAC)
CUSTOMER SHUNT TRIP INTERFACE TERMINALS (KT3)
TERMINAL BLOCK KT3 IS RATED FOR 14-8AWG CONDUCTORS, WITH 18 IN-LBS OF TORQUE
REMOVE SCREWS (TYPICAL EACH SIDE)
WIRING SHIELD BRACKET (REMOVAL IS REQUIRED - MUST BE RE-INSTALLED)
STC2020-120 SHUNT TRIP
TRYSTAR
TITLE SERIES 700F CABINET OUTLINE 75KVA - 150KVA
DWG. NO. 432000
REV 01
SIZE D
SCALE 1:8
SHEET 1 OF 2

NOTES

© 2026 All rights reserved.

15765 Acorn Trail / Faribault, MN 55021 / 507.333.3990
Document Number: 1812IB0726 R0926 / © 2026 Trystar, LLC. All rights reserved.