OZIP DC/DC CONVERTER

TABLE OF CONTENTS

IMPORTANT SAFETY INSTRUCTIONS ----------4
INTRODUCTION ----------7
FUNCTIONAL DESCRIPTION ----------8
ELECTRICAL INTERFACE ---------- 21
PARAMETER REGISTER INTERFACE ---------- 24
TRYSTAR POWER STUDIO™ TOOL ---------- 49
WARRANTY AND PRODUCT INFORMATION ----- 50

© 2026 All rights reserved.

About Trystar

Trystar LLC is a proven innovator of power, control, and instrumentation solutions for the most demanding industrial applications. Trystar products include variable motor drives, grid tie inverters, frequency converters, standalone inverters, DC/DC converters, and DSP based control boards for power control applications.

Trademarks

OZip is a trademark of Trystar LLC Other trademarks, registered trademarks, and product names are the property of their respective owners and are used herein for identification purposes only.

Exclusion for Documentation

UNLESS SPECIFICALLY AGREED TO IN WRITING, Trystar LLC (“Trystar”)

A. MAKES NO WARRANTY AS TO THE ACCURACY, SUFFICIENCY OR SUITABILITY OF ANY TECHNICAL OR OTHER INFORMATION PROVIDED IN ITS MANUALS OR OTHER DOCUMENTATION.

B. ASSUMES NO RESPONSIBILITY OR LIABILITY FOR LOSSES, DAMAGES, COSTS OR EXPENSES, WHETHER SPECIAL, DIRECT, INDIRECT, CONSEQUENTIAL OR INCIDENTAL, WHICH MIGHT ARISE OUT OF THE USE OF SUCH INFORMATION. THE USE OF ANY SUCH INFORMATION WILL BE ENTIRELY AT THE USER’S RISK.

C. IF THIS MANUAL IS IN ANY LANGUAGE OTHER THAN ENGLISH, ALTHOUGH STEPS HAVE BEEN TAKEN TO MAINTAIN THE ACCURACY OF THE TRANSLATION, THE ACCURACY CANNOT BE GUARANTEED. APPROVED TRYSTAR CONTENT IS CONTAINED WITH THE ENGLISH LANGUAGE VERSION WHICH IS POSTED AT WWW.TRYSTAR.COM.

© 2026 All rights reserved.

IMPORTANT SAFETY INSTRUCTIONS

Safety Notices

The following safety notices are provided for your safety and as a means of preventing damage to the product or components in the application. Specific Dangers, Warnings, and Cautions that apply to activities are listed at the beginning of the relevant sections and are repeated or supplemented at critical points throughout these sections. Please read the information carefully, since it is provided for your personal safety and will also help prolong the service life of your IPM DC/DC Converter and the equipment you connect to it.

Definitions and Symbols

DANGER

This symbol indicates high voltage. It calls your attention to items or operations that could be dangerous to you and other persons operating this equipment. Read the message and follow the instructions carefully.

WARNING

Indicates a potentially hazardous situation which, if not avoided, can result in serious injury or death.

CAUTION

Indicates a potentially hazardous situation which, if not avoided, can result in minor to moderate injury, or serious damage to the product. The situation described in the CAUTION may, if not avoided, lead to serious results. Important safety measures are described in CAUTION (as well as WARNING).

© 2026 All rights reserved.

Electrical Safety

DANGER

Power modules, such as the OZip IPM, are typically connected to hazardous voltages. When servicing the IPM, there may be exposed terminals with high voltage present, as well as residual charge in place for some time after the removal of the input source. Extreme care should be taken to protect against shock.

1. Before startup, observe the warnings and safety instructions provided throughout this manual. All power terminals should be considered to be at high DC potential unless verified to be otherwise. These voltages are extremely dangerous and may cause death or severe injury if contacted.
2. All power terminals should be considered live with the application of input voltage regardless of operating mode of the load.
3. Do not make any connections when the IPM is connected to its power source.
4. Never work on the IPM, power cables, or load when input power is applied.

WARNING

1. After disconnecting the input power, residual charge will remain on the IPM absent any external load through which that charge can dissipate. It is the customer's responsibility to develop and implement a means at the application level to assure that charge is dissipated in a limited and controlled fashion for operator safety and product longevity.
2. Do not make any insulation or voltage withstand tests on the IPM.
3. Always ensure by measuring with a multimeter that:

a. There is no voltage between the AC terminals (A, B, & C) and the heatsink, considered chassis ground.

b. There is no voltage between the DC terminals (+ & -), nor between either DC terminal and the heatsink, considered chassis ground.

© 2026 All rights reserved.

⚠ CAUTION ⚠

1. The Intelligent Power Module (IPM) operates on several electrical reference points, whether these be earth ground, communication ground, signal ground, etc. Proper system design regarding equipotential bonding must be employed so that all simultaneously accessible conductive parts are electrically connected to prevent hazardous voltages appearing between them. This is accomplished by a proper factory grounding.
2. Ensure sufficient cooling for safe operation of the IPM. Even so, power range capabilities will allow the power terminals and the heatsink of the IPM to reach and maintain temperatures high enough to burn skin on contact. Allow adequate time for cooling before attempting to service the unit.
3. Remove any External Start signals before resetting system faults to prevent an unintentional restart of the IPM, which could result in personal injury or equipment damage.
4. The IPM is not field repairable. Never attempt to repair a malfunctioning unit; contact Trystar for a replacement.
5. Each IPM is sealed with a warranty void sticker across the top cover which will tear if the cover is removed. A torn warranty void sticker shall be interpreted as unauthorized access to the internal contents of the IPM, in violation of warranty terms, thereby terminating any remaining warranty otherwise in effect.

© 2026 All rights reserved.

INTRODUCTION

This document is intended to provide instruction on how to configure, operate, troubleshoot, and maintain an Intelligent Power Module (IPM) DC/DC Converter. To provide for safe installation and operation of the equipment, please read the safety guidelines at the beginning of this manual and follow the procedures outlined before connecting power to the IPM.

Definitions

CAN	Controller Area Network
DSP	Digital Signal Processor
EEPROM	Electrically Erasable Programmable Read Only Memory
EMC	Electro-magnetic Compatibility
EMI	Electro-magnetic Interference
GND	Ground, low side of input power supply
GUI	Graphical User Interface
HMI	Human Machine Interface
IGBT	Insulated Gate Bipolar Transistor
IPM	Intelligent Power Module
NC	Not Connected
PCB	Printed Circuit Board
PCC	Power Control Center
PI	Proportional and Integral Compensator
PLC	Programmable Logic Controller
POR	Power On Reset
PWM	Pulse width modulation
THD	Total Harmonic Distortion

© 2026 All rights reserved.

FUNCTIONAL DESCRIPTION

The IPM DC/DC Converter is a non-isolated, interleaved, Buck/Boost converter topology. It's a bi-directional DC to DC converter that can be used to convert either a low DC voltage to a higher DC voltage, or vice versa. Basic operation of a single phase is relatively simple, requiring an inductor, two switches (usually a transistor and a diode), and a capacitor. The controller alternately connects the inductor to an input voltage source to store energy and the load to discharge the energy.

This basic structure can be extended to a multi-phase interleaved topology by adding multiple sets (or phases) of switches and inductors. In this case, the phases of the switching commands at each inductor are offset uniformly (i.e. 180° for two phases, 120° for three phases, etc.) such that the ripple current, and hence ripple voltage, seen on the output is reduced due to the cancellation between the multiple phases.

Figure 1 illustrates the generic, interleaved, Buck/Boost DC/DC system topology. While component values will vary from application to application depending on the input and output voltages and power level, the overall system configuration will generally remain the same.

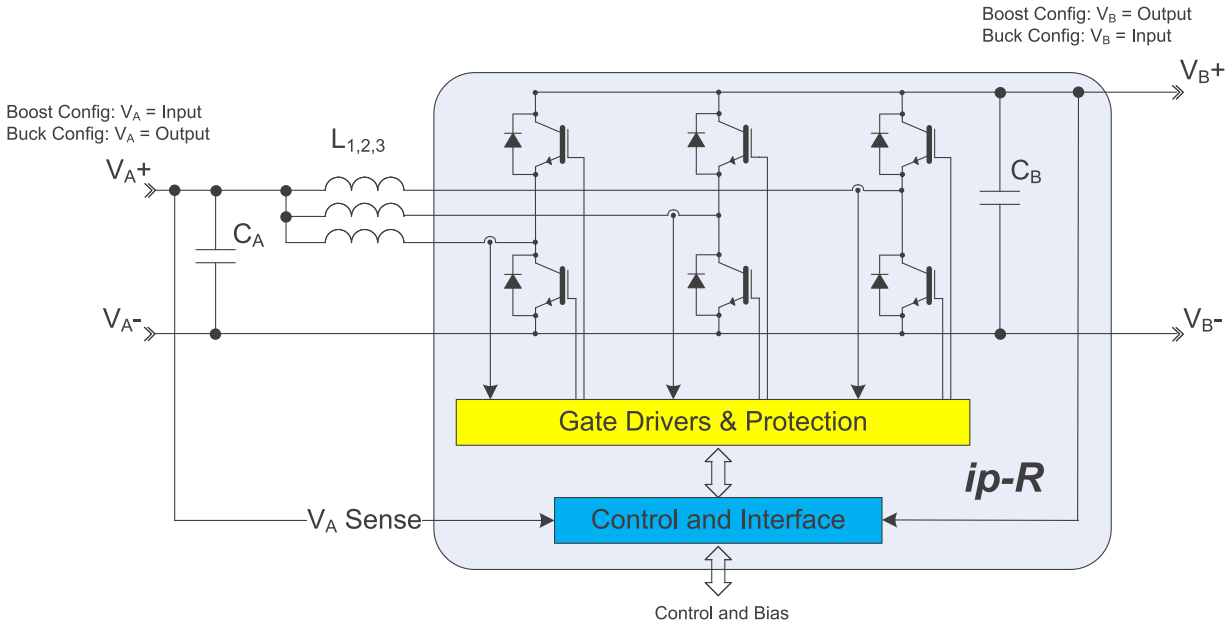

Figure 1 – Interleaved Buck/Boost System Schematic

Typical IPM DC/DC Converter applications include renewable energy grid tie systems, such as PV or battery-based energy storage, as well as high speed turbo-generators.

© 2026 All rights reserved.

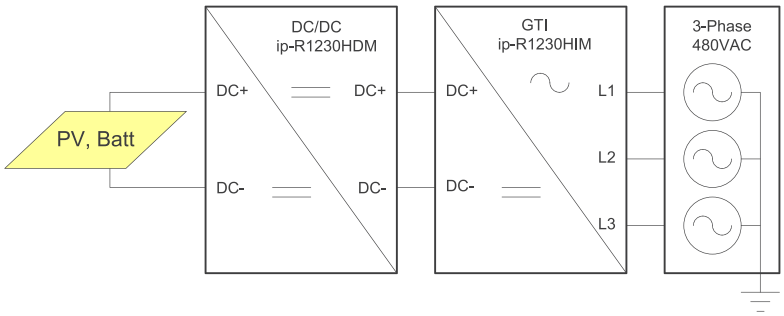

Figure 2 – Typical Renewable Energy Application

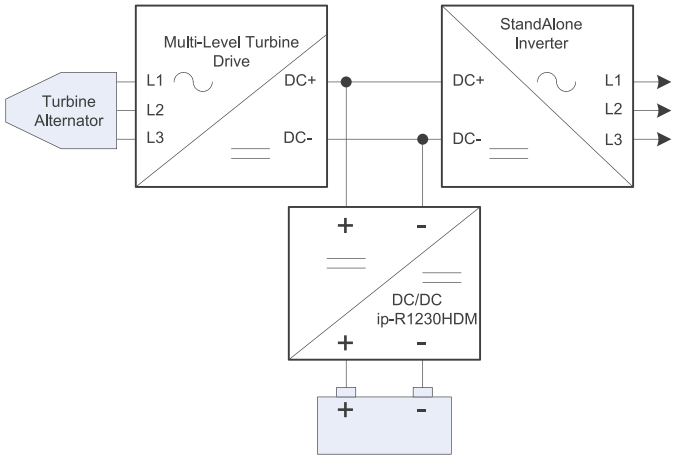

Figure 3 – Typical Turbo-Generator Application

Figure 4 illustrates a typical IPM DC/DC Converter electrical system implementation. While component values will vary from application to application depending on voltage and power level, the overall system configuration will generally remain the same. The diagram shows optional interfaces including a high voltage DC link pre-charge circuit.

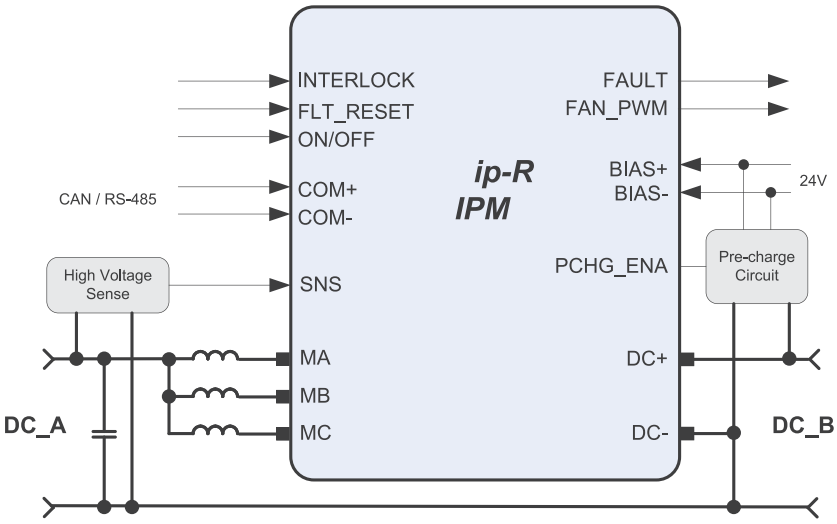

Figure 4 – Typical DC/DC Converter Electrical System Schematic

© 2026 All rights reserved.

Pre-Charge Control (Optional)

CAUTION

Failure to control the in-rush currents to acceptable limits can cause catastrophic damage to the IPM and void the warranty.

The IPM contains a significant amount of internal capacitance on the high voltage DC link. When DC input power is applied, the step response of the voltage input will cause the capacitance to charge. The capacitor charging starts with an inrush current defined by $I = C(dV/dT)$ and ends with an exponential decay down to the steady state condition. The peak inrush current will depend upon the capacitance in the IPM model being used and the rate of change of the input voltage (dV/dT).

If the system provides a means to limit the initial inrush current during power up to 10A or less, there is no need for additional pre-charge circuitry. If the inrush current is greater than 10A, a pre-charge circuit should be used to limit the in-rush current. The converter provides the ability to control a main input contactor and/or a smaller pre-charge contactor or active pre-charge circuit based on ***PID 0x8087 – Pre-charge Enable.***

Pre-Charge – Boost Topology

When using the Boost Topology, the IPM's DC Link serves as the output capacitance for the converter, and must be charged. Some implementations may also include significant input capacitance that should also be charged. To provide for flexible system implementation, the converter can be configured to charge either through the input or directly to the output using ***PID 0x808A – Pre-Charge Sense Location.***

Figure 5 illustrates an implementation with additional input capacitance, CA. In this example a passive pre-charge circuit is used to charge both CA and CB, via the internal rectifiers of the power transistors. In this case, ***PID 0x808A – Pre-Charge Sense Location*** is set to 1 (Use Input Voltage).

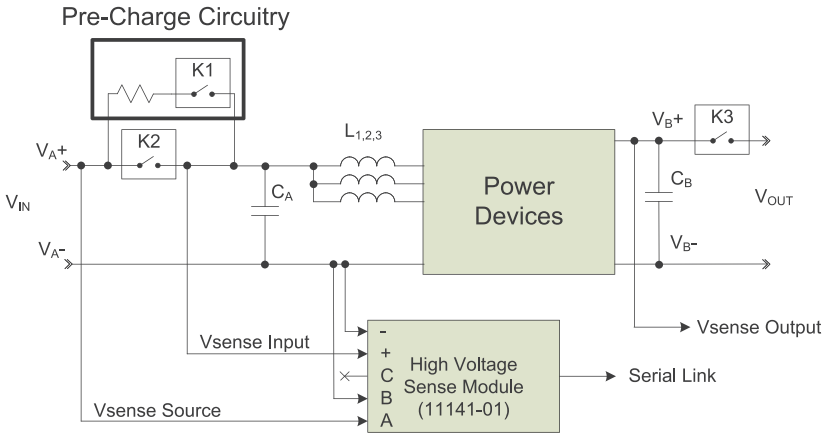

Figure 5 – Passive Input Pre-Charge Circuit (Boost Configuration)

© 2026 All rights reserved.

In Figure 6, there is no additional significant input capacitance and an active pre-charge circuit is used to directly charge the output capacitance CB. In this case, ***PID 0x808A – Pre-Charge Sense Location*** is set to 0 (Use Output Voltage).

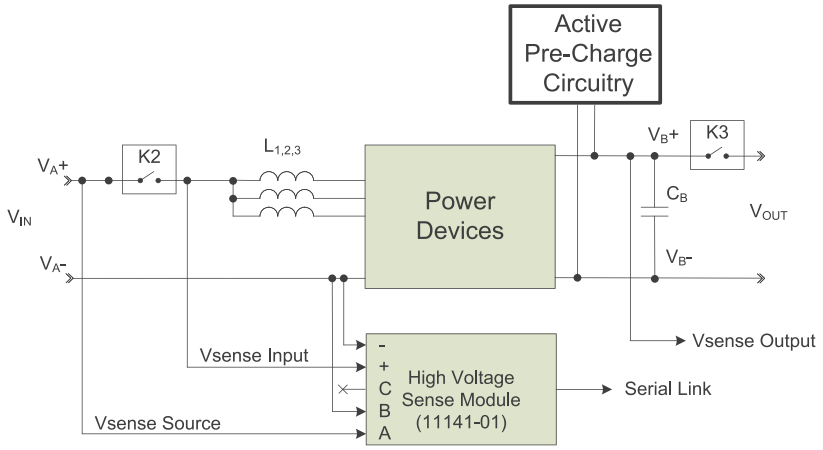

Figure 6 – Active Output Pre-Charge Circuit (Boost Configuration)

Pre-Charge – Buck Topology

The Buck topology is slightly simpler in that the internal rectifiers of the power transistors isolate the output from the input. In this configuration the IPM's DC Link serves as the input capacitance for the converter and must be charged. In most cases there isn't a need to precharge the output of the converter. However, in some applications, such as when the converter output is tied to a battery, pre-charging the output capacitor may be necessary.

Figure 7 illustrates the typical application in which the converter's input is pre-charged and the output is tied directly to a load. In this case, ***PID 0x808A – Pre-Charge Sense Location*** is set to 1 (Use Input Voltage).

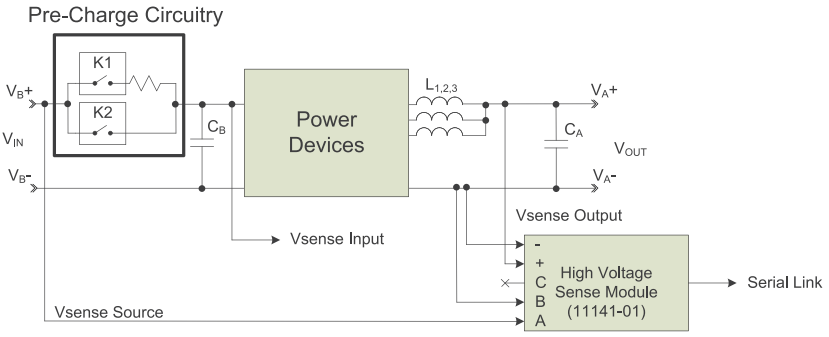

Figure 7 – Passive Input Pre-Charge Circuit (Buck Configuration)

Figure 8 illustrates an application in which it is necessary to pre-charge the output capacitor. In this case, ***PID 0x808A – Pre-Charge Sense Location*** is set to 0 (Use Output Voltage). Note that in this scenario there must be some other means to safely charge the input capacitance.

© 2026 All rights reserved.

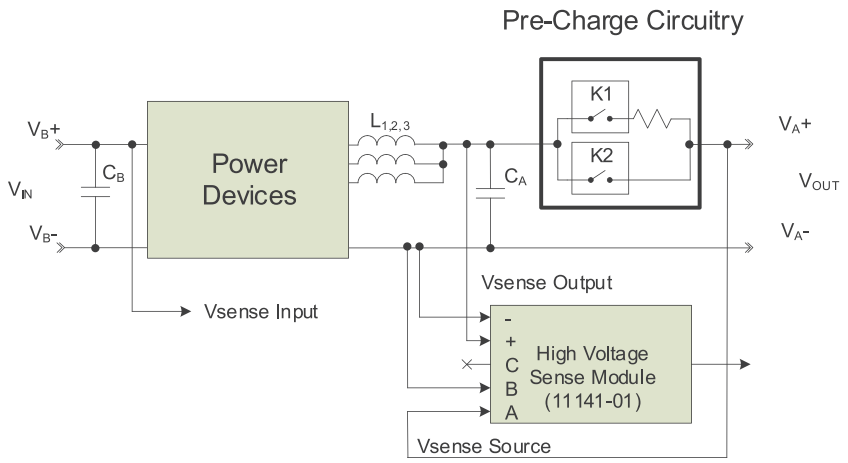

Figure 8 – Passive Output Pre-Charge Circuit (Buck Configuration)

Control Interface

The primary method for configuring and controlling the converter is through the IPM's serial interface (CAN or RS-485, depending on the selected IPM model). The CAN interface utilizes the OzCAN serial protocol whereas the RS-485 option utilizes Modbus.

H/W On/Off

In simple applications, the user may optionally use the isolated *On/Off* hardware input (pin #29) to turn the converter ON or OFF by enabling ***PID 0x804E – Hardware On/Off Pin Enable.*** When the hardware *On/Off* pin is enabled, the soft ***PID 0x0000 – On/Off*** command is ignored and only the hardware pin is used. Likewise, when the hardware pin is not enabled, it is ignored and only the soft *On/Off* command is recognized.

H/W Fault Reset

In simple applications, it may desirable to have a hardware means to reset fault conditions. The isolated input on Pin #3 can be used for this purpose by enabling ***PID 0x8050 – Hardware Fault Reset Pin Enable.*** When enabled, a rising edge on the FLT_RST hardware pin #3 will attempt to clear any latched fault conditions as described in 2.6.2. Note that if any fault conditions still exist after the fault reset occurs, the converter will remain in the ***Fault*** state.

H/W Interlock (ESTOP)

If the hardware interlock pin, #4, is enabled by ***PID 0x804F – Hardware Interlock Pin Enable,*** the converter will assert a fault if the ILOCK hardware pin is driven low or unconnected. If this pin is not enabled, or if it is driven high, no hardware interlock faults will be generated. This isolated input is typically tied to the converter's 24V supply through an emergency stop (ESTOP) switch or a contactor controlled by the system's master controller.

© 2026 All rights reserved.

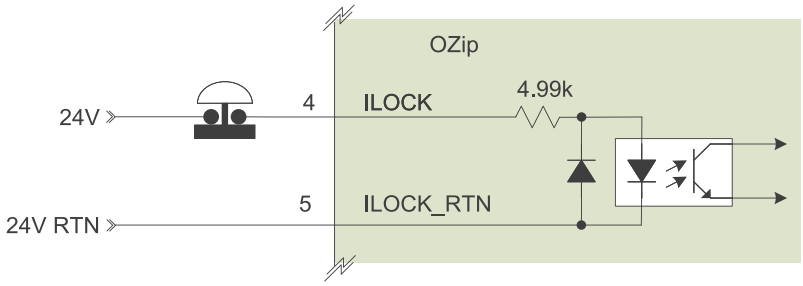

Figure 9 – H/W Interlock Circuit Interface

Operating Modes

The converter can be configured to operate either in a Boost or Buck topology using ***PID 0x8055 – Control Topology.*** The primary difference between the two topologies being which voltage is considered the "input" and which is the "output", as depicted in Figure 1. Both topologies support two control modes, either Current control or Voltage control, configured using ***PID 0x804B – Default Control Mode.***

Figure 10 presents a block diagram of the control scheme employed in the firmware. The voltage controller consists of a digital proportional-integral (PI) compensator. The reference input to the controller sets the value of the DC output voltage. This reference is compared to the measured output voltage, providing the voltage error input to the compensator. The output of the compensator represents the total inductor current command which is limited to a min/max value before being attenuated by the interleaved phase count.

The attenuated and limited voltage regulator output serves as the current loop reference for each of the interleaved phases. The current error is calculated as the difference between this reference and each of the measured phase currents. A voltage feed forward compensated PI regulator is used to calculate the PWM duty cycle command for each phase.

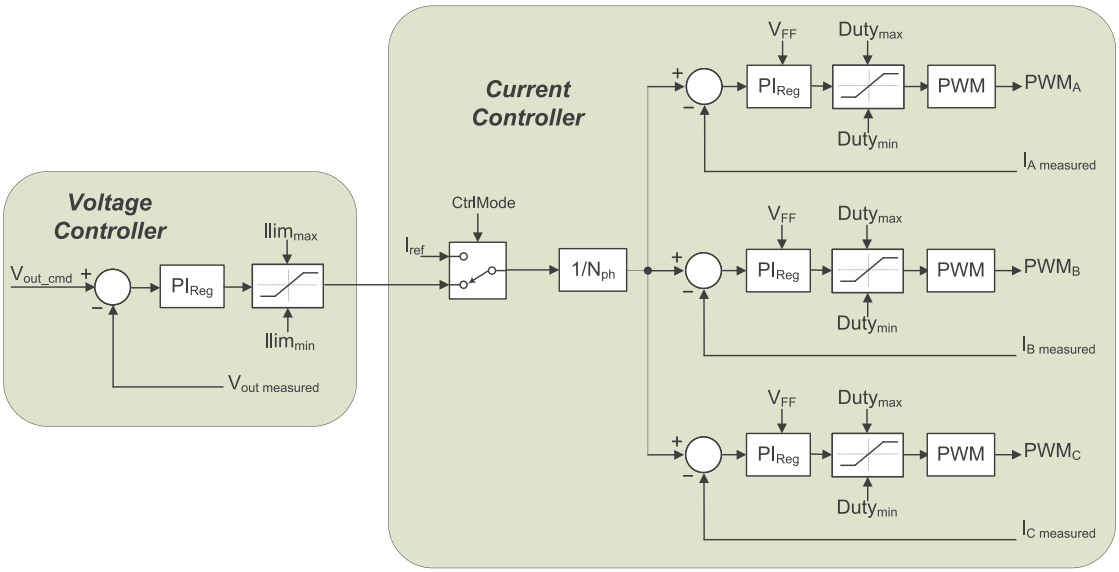

Figure 10 – Interleaved Control Block Diagram

© 2026 All rights reserved.

When operating in current control mode, ***PID 0x804B – Default Control Mode*** = 1, the outer voltage loop is disabled, and the current controller reference is directly set using ***PID 0x0002 – Current Setpoint***. Note that when configured for the Boost topology, ***PID 0x8055 – Control Topology*** = 0, the controller regulates the input current, and when configured for the Buck topology, output current is regulated, as shown in Figure 11.

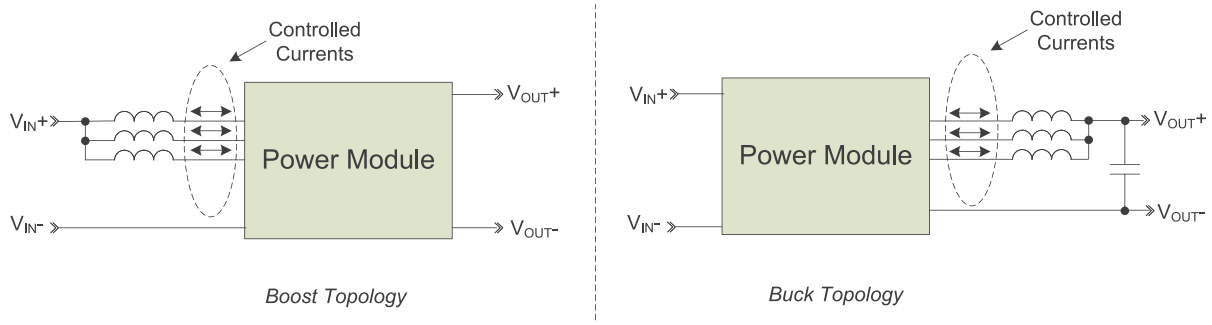

Figure 11 – Current Control Implementation

State Sequencing

A state machine is used to provide deterministic control and sequencing of the DC/DC converter hardware. If a fault is detected in any of the operating states, the hardware is placed into a safe condition and the state machine is latched into the Fault state. Figure 12 illustrates the operating states as well as the transition logic employed in the system state machine. As illustrated, the converter is disabled and the power stage hardware will be inoperable until the ***Idle*** state. Any attempts to turn the converter ON, either with ***PID 0x0000 – On/Off Control***, or with the optional ON/OFF hardware pin control, will be ignored until the converter reaches the ***Idle*** state.

© 2026 All rights reserved.

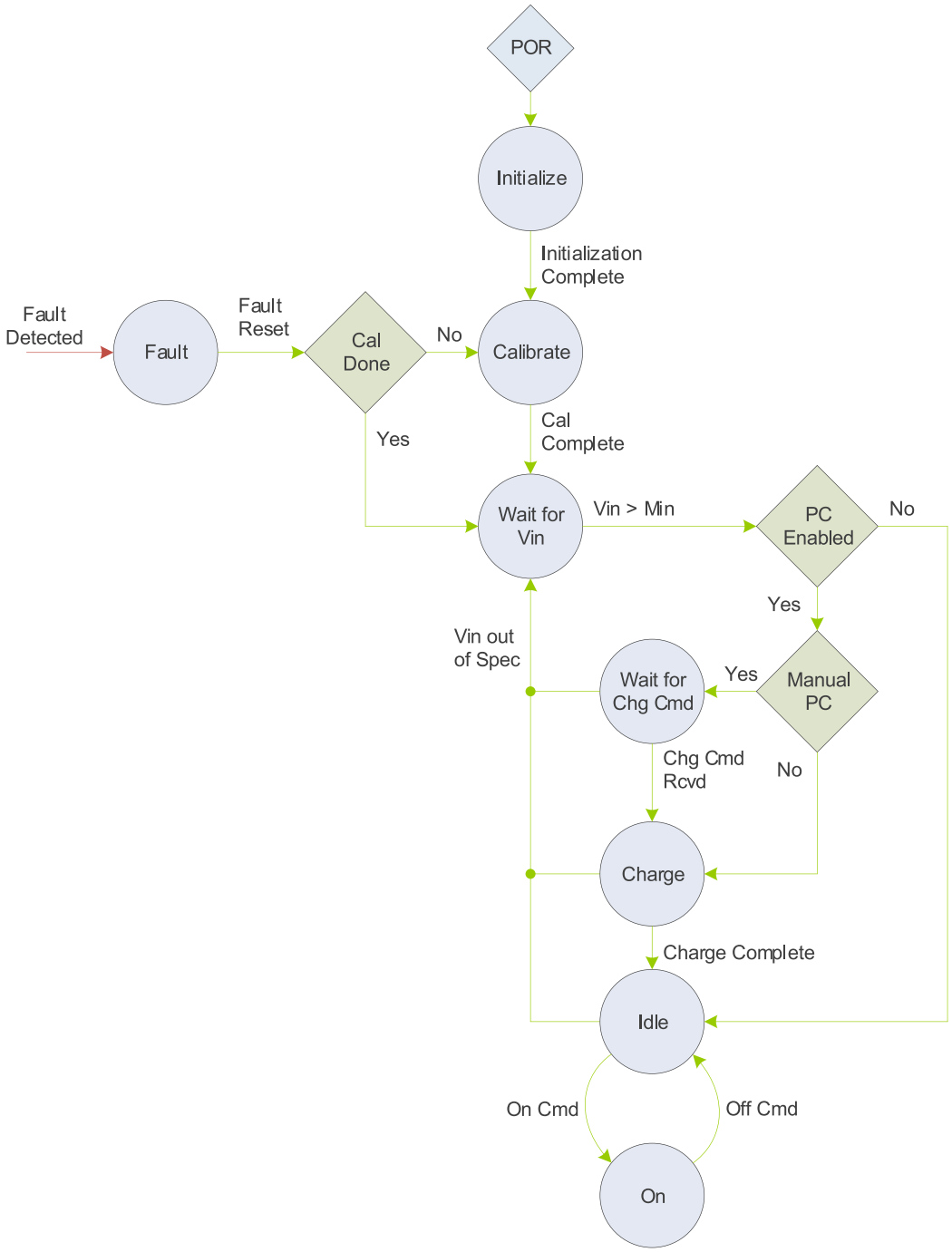

Figure 12 – System State Machine

Initialize

The state machine resets to the ***Initialize*** state following a power-on-reset (POR) event. While in this state the converter is not operable; the firmware is initializing hardware peripherals, configuring variables, and performing self-health tests. Upon successful initialization, the state machine will auto-transition to the ***Calibrate*** state.

© 2026 All rights reserved.

Calibrate

The ***Calibrate*** state is used to calibrate system hardware as applicable. The converter is not operable while in the ***Calibrate*** state. Following successful calibration, the state machine will auto-transition to the ***Pre-Charge*** state.

Wait For Vin

The ***Wait For Vin*** state is used to wait for a valid DC input voltage before attempting to begin the pre-charge process if enabled. The state machine will remain in the ***Wait For Vin*** state indefinitely, transitioning either on a fault or upon detecting a valid input voltage as specified in the ***PID 0x8028 - Input Under-Voltage Fault Threshold***. The converter is not operable while in the ***Wait For Vin*** state.

Wait For Charge Cmd

The ***Wait For Charge Cmd*** state is used to wait for the host to issue a valid pre-charge enable command, ***PID 0x0005 – Pre-Charge Enable*** = 1, if the converter has been configured for manual pre-charge, ***PID 0x8082 – Pre-Charge Auto Enable*** = 0. The state machine will remain in the ***Wait For Charge Cmd*** state indefinitely, transitioning either on a fault or upon detecting a in valid input voltage. The converter is not operable while in the ***Wait For Charge Cmd*** state.

Charge

The ***Charge*** state is used to charge the input or output capacitance in a controlled manner before directly connecting to the DC input source. Once the capacitance is charged, the state machine will sequence to the ***Idle*** state. The converter is not operable while in the Charge state.

Idle

Once in the ***Idle*** state the converter is ready for use. The state machine will remain in the ***Idl***e state indefinitely, transitioning either on a fault, a turn-on command, or if the input voltage falls out of specification.

On

While in the ***On*** state the converter is processing power and controlling voltage or current, depending on the configuration. The state machine will remain in the ***On*** state indefinitely, transitioning either on a fault or a turn-off command. When a turn-off command is received, the state machine will immediately go to the ***Idle*** state.

Fault

If a fault is detected in any of the operating states, the power stage is immediately turned OFF (if running), any enabled contactors will be opened, and the converter will transition to the ***Fault*** state. The converter will remain in this state until the latched fault information is explicitly cleared using ***PID 0x0004 – Fault Reset*** or a rising edge is detected on the FLT_RST hardware pin (if enabled by ***PID 0x8050 – Hardware Fault Reset Pin Enable***). If any fault conditions still exist after the fault reset occurs, the converter will remain in the Fault state. All attempts to turn the converter ON are ignored while in the ***Fault*** state.

Following a successful fault reset, the converter will either transition back to the ***Calibrate*** or Pre-Charge state depending on whether the firmware

© 2026 All rights reserved.

had finished executing its power-on calibration routines.

Fault and Warning Conditions

The controller provides warning indicators and fault protection in the event of conditions that may cause damage to the equipment or injure personnel. The various conditions that are monitored are listed and described in the following sections.

Warnings

The controller provides the warning indicators listed below. These warning conditions do not prohibit operation of the converter; they are merely reported for informational purposes only. Each warning condition described below is reported in the PID 0x400E - Warning Status instrumentation register and reported on the CAN bus in the Alarm Status CAN message.

High Phase Current

In the case of an interleaved topology, the firmware monitors the current in each of the interleaved phases and will set a flag (one per phase) if the current exceeds ***PID 0x8033 - Phase Over-Current Warning Threshold***. These flags remain set until the respective current falls below the threshold less ***PID 0x803B - Iph Over-Current Recover Delta.***

High Total Current

The firmware monitors the sum of the interleaved phase currents and will set a flag if the current exceeds ***PID 0x8030 – Total Inductor Over-Current Warning Threshold.*** These flags remain set until the respective current falls below the threshold less ***PID 0x803A – Total Inductor Over-Current Recover Delta.***

High IGBT Temperature

The IPM power module provides temperature sensors at the IGBT modules for each of the AC phases. The converter monitors these temperatures and will set a warning flag if any exceed 110°C. These warning flags will remain set until the temperature(s) fall below 105°C.

High PCB Temperature

The IPM power module provides a temperature sensor on the internal controller PCB. The converter monitors this temperature and will set a warning flag if it exceeds 85°C. This warning flag will remain set until the temperature falls below 80°C.

Low Input Voltage

The firmware monitors the input voltage and will set a warning flag if it is lower than ***PID 0x8029 - Input Under-Voltage Warning Threshold.*** This flag will remain set until the voltage rises above the threshold plus ***PID 0x8037 - Vin Under-Voltage Recover Delta.***

High Input Voltage

The firmware monitors the input voltage and will set a warning flag if it exceeds ***PID 0x802B - Input Over-Voltage Warning Threshold***. This flag will remain set until the voltage falls below the threshold less ***PID 0x8038 - Vin Over-Voltage Recover Delta.***

© 2026 All rights reserved.

High Output Voltage

The firmware monitors the DC output voltage and will set a warning flag if it exceeds ***PID 0x802D - Output Over-Voltage Warning Threshold***. This flag will remain set until the voltage falls below the threshold less ***PID 0x8039 - Vout Over-Voltage Recover Delta.***

Local Bias Supply Tolerance Warnings

The converter monitors the local 15V and 5V bias supplies and will set a warning flag if the corresponding supply voltage is not within the range required by the on-board hardware. The various warning flags will remain set while the supply voltages are out of tolerance and will be cleared when the supply is found to be within the required limits.

Faults

The converter provides the fault protection listed below. Whenever a fault occurs the converter will automatically turn OFF, open any contactors that may have been enabled, and transition to the ***Fault*** state. Each fault condition is latched and reported in the ***PID 0x400F - Fault Status*** instrumentation register and reported on the CAN bus in the Alarm Status CAN message. The converter also indicates the presence of a fault condition by asserting the dedicated FLT_OUT hardware pin any time one or more latched fault bits are present.

The converter remains in the FAULT state and the latched fault flags remain set until explicitly cleared using ***PID 0x0004 - Fault Reset*** command. Upon receiving the ***Fault Reset*** command, the converter will attempt to clear all latched fault bits. Following a successful fault reset, the converter will either transition back to the ***Calibrate*** or ***Pre-Charge*** state depending on whether the firmware had finished executing its power-on calibration routines. If upon reset, any sources of faults are still active, their respective fault flags are latched again and the converter will remain in the ***Fault*** state.

Converter Hardware Faults

The converter software, along with the IPM power state hardware, provides a means for recognizing hardware-based IGBT de-saturation and gate drive faults. These two hardware fault conditions are detected and latched separately for each of the three interleaved phases.

Hardware DC Link Over-Voltage

The converter software, along with the IPM power stage hardware, provides a means for detecting and reporting a hardware-based DC link over-voltage fault condition. Refer to the IPM hardware manual for the model being used to determine the over-voltage fault trip threshold.

DC Input Over-Voltage

The converter monitors the measured input voltage and will assert a fault if it exceeds the value specified in ***PID 0x802A – DC Input Over Voltage Fault Threshold.***

Output Over-Voltage

The converter monitors the measured output voltage and will assert a fault if it exceeds the value specified in ***PID 0x802C – Output Over Voltage Fault Threshold.***

© 2026 All rights reserved.

Input Under-Voltage

The converter monitors the measured input voltage and will assert a fault if it drops below the value specified in PID 0x8028 – Input Under Voltage Fault Threshold. This fault is only generated if the converter is ON.

Converter Over-Temperature

The firmware monitors the IGBT module temperatures in the IPM power stage and will assert a fault if any exceed 115°C.

PCB Over-Temperature

The firmware monitors the temperature on the IPM's internal control PCB and will assert a fault if it exceeds 90°C.

Software Phase Over-Current

The firmware monitors the current for each of the interleaved phases and asserts a fault if any phase exceeds the ***PID 0x8031 - Phase Over-Current Fault Threshold.***

Software Total Over-Current

The firmware monitors the total converter current and asserts a fault if it exceeds ***PID 0x802E*** – ***Total Inductor Over-Current Fault Threshold***. The converter current is the sum of the interleaved phase currents.

Pre-Charge Timeout Error

The firmware monitors the amount of time spent in the ***Charge*** State. A fault will be asserted if ***PID 0x8087*** – ***Pre-Charge Enable*** is set to TRUE (i.e. the DC/DC is controlling the pre-charge function) and the elapsed time exceeds the ***PID 0x8088*** – ***Pre-Charge Timeout Threshold.***

Communications Error

This fault will be asserted if PID 0x0007 – Host Heartbeat hasn't incremented by 1, or been reset to zero, within PID 0x8032 – Host Heartbeat Timeout. This fault check can be disabled by setting the Host Heartbeat Timeout to 0.

Hardware Interlock

If the hardware interlock pin is enabled in ***PID 0x804F*** – ***Hardware Interlock Pin Enable***, the converter will assert a fault if the ILOCK hardware pin is driven low or unconnected. If this pin is not enabled, or if it is driven high, no hardware interlock faults will be generated. This pin is typically tied to the converter's 24V supply through an emergency stop (ESTOP) switch or a contactor controlled by the system's master controller.

Calibration Error

This error is asserted if the converter is unable to perform any required internal calibrations when powering up. There is likely an issue with the converter's internal control board hardware if this error occurs. If this should occur, contact Trystar for further diagnostic tips or to determine if the unit should be returned using the RMA process described at the end of this document.

© 2026 All rights reserved.

Configuration Memory Error

This fault occurs any time a read from the converter's on-board configuration memory (EEPROM) is performed and the CRC for the block of data being read does not match the CRC that is stored in the memory. Unlike all other fault sources, this fault condition is not clearable with ***PID 0x0004 – Fault Reset*** or the FLT_RST hardware pin because this fault condition indicates the possibility that the converter's configuration parameters may be corrupted. If this fault occurs, the user may try cycling the power to the control board. If this error remains, the user may try reloading their configuration parameters using the Power Studio™ tool. If the error persists after attempting both actions, there may be an issue with the converter's control board hardware. If this should occur, contact Trystar for further diagnostic tips or to determine if the unit should be returned using the RMA process described at the end of this document.

Invalid Factory Configuration, IPM Model, DC/DC Model

These faults occur if the application configuration does not match the IPM hardware. Unlike all other fault sources, these fault conditions are not clearable. If they should occur, contact Trystar for further diagnostic tips or to determine if the unit should be returned using the RMA process described at the end of this document.

Auxiliary Contactor Error

The converter monitors the status of the auxiliary contactor feedback signal if the auxiliary contactor monitor is enabled in ***PID 0x8089 - Contactor Monitor Enables***. If, after the time specified in ***PID 0x808D - Contactor Debounce Time*** has passed, the auxiliary contactor is not in the state commanded by the controller, a fault will be asserted.

Input Contactor Error

The controller monitors the status of the DC input contactor feedback signal if the input contactor monitor is enabled in the ***PID 0x8089 - Contactor Monitor Enables***. If, after the time specified in ***PID 0x808D - Contactor Debounce Time*** has passed, this contactor is not in the state commanded by the controller, a fault will be asserted.

© 2026 All rights reserved.

ELECTRICAL INTERFACE

Figure 13 illustrates the typical hardware connections when using the IPM as a bi-directional, Buck/Boost, DC/DC Converter.

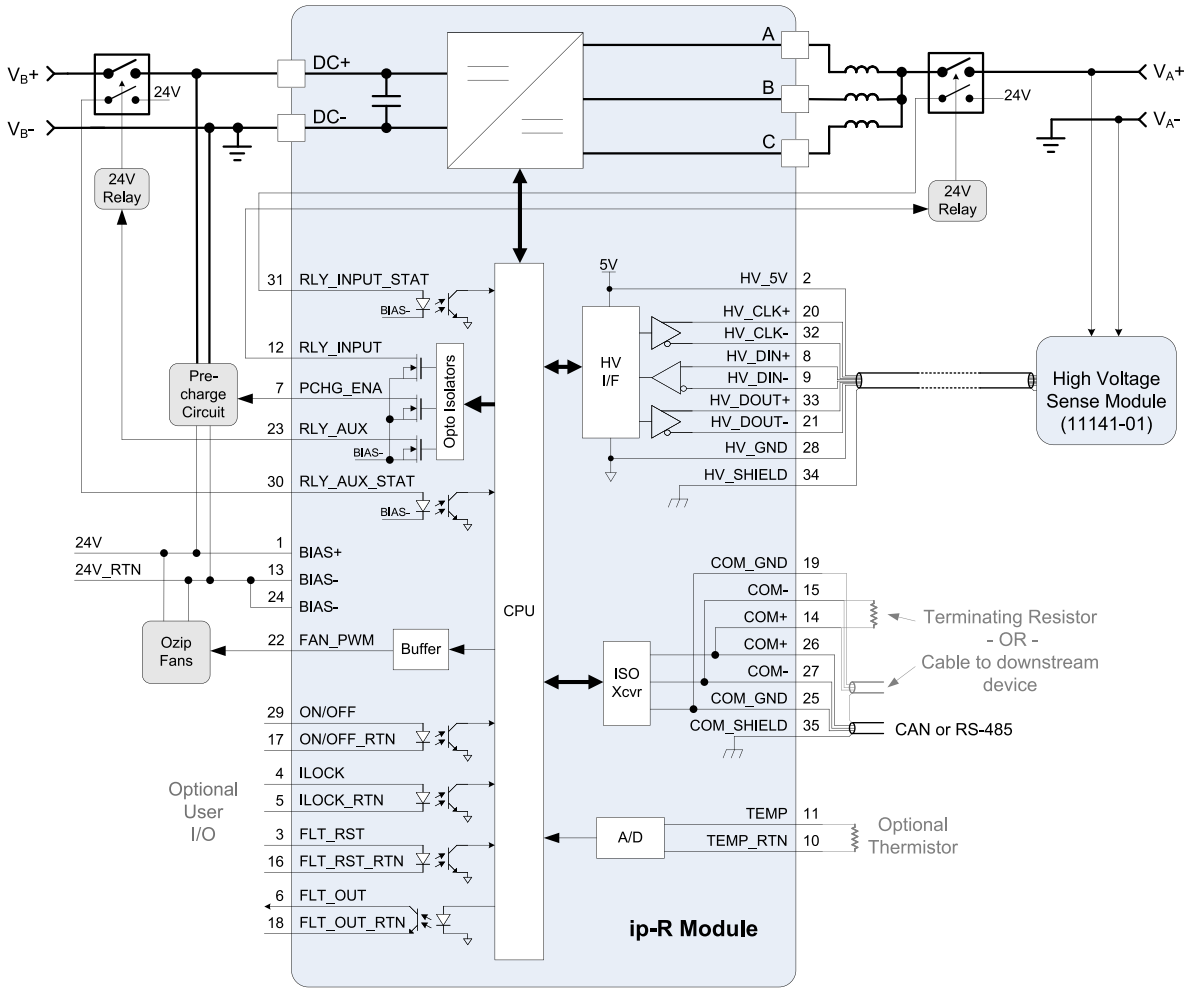

Figure 13 – Hardware Connections Overview

Control Signal Wiring

Bias voltage and control signal connections are made using a 35-pin AMPSEAL connector. The figure below shows the pin orientation for this connector. This is followed by a table with the specific pin assignments and descriptions.

© 2026 All rights reserved.

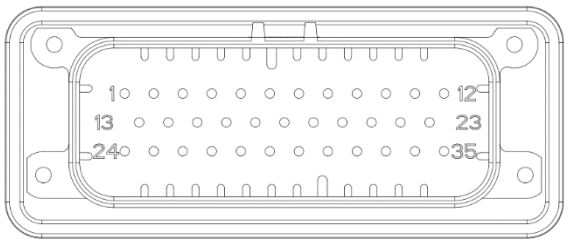

Figure 14 – Control Signal Connector Pin Orientation

Table 1 – Control Interface Pin Descriptions

Pin	Signal	Description
1	BIAS+	Input bias voltage
2	HV_5V	5V supply to high voltage sense interface
3	FLT_RST	Fault Reset – when enabled (***PID 0x8050***) a low-to-high transition on this isolated input pin will attempt to clear any latched fault conditions[1]
4	ILOCK	Hardware Interlock (emergency stop) – when enabled (***PID 0x804F***) and this isolated pin is low or unconnected, the converter is forced into the Fault state and immediately turned OFF[1]
5	ILOCK_RTN	Hardware Interlock Return[1]
6	FLT_OUT	Fault Output – this isolated open-collector output is driven low any time the converter is in the ***Fault*** state, otherwise it will be undriven (high impedance)
7	PCHG_ENA	Pre-charge Enable – when enabled (***PID 0x8087***) this low side inductive load driver output is used to control local DC link pre-charge hardware
8	HV_DIN+	Differential data inputs from the high voltage sense interface
9	HV_DIN-	
10	TEMP_RTN	Thermistor temperature sensor return[1]
11	TEMP	Thermistor temperature sensor[1]
12	RLY_INPUT	Input Relay Control – this low side inductive load driver output is used to control an optional DC input contactor (required if precharge is enabled)[1]
13	BIAS-	Input bias voltage return
14	COM+	Redundant serial interface connections - used for daisy-chained connections to other devices if this unit is not at the end of the bus or for connecting termination resistor if this is the end of the bus
15	COM-	
16	FLT_RST_RTN	Fault Reset Return[1]
17	ON/OFF_RTN	On/Off Return[1]
18	FLT_OUT_RTN	Fault Output Return[1]
19	COM_GND	Isolated serial interface ground reference
20	HV_CLK+	Differential "+" clock output to the high voltage sense interface
21	HV_DOUT-	Differential "-" data output to the high voltage sense interface
22	FAN_PWM	IPM pulse width modulated fan control output – connect to fan interface on IPM module if present[1]

© 2026 All rights reserved.

23	RLY_AUX	Aux Relay Control – this low side inductive load driver output is used to control an auxillary device via S/W commands
24	BIAS-	Input bias voltage return
25	COM_GND	Isolated serial interface ground reference
26	COM+	Isolated differential serial interface (can be either CAN or RS-485 depending on IPM model)
27	COM-	
28	HV_GND	Ground reference to high voltage sense interface
29	ON/OFF	On/Off – when enabled (***PID 0x804E***), driving this isolated input high will attempt to turn the converter ON and low or disconnected will turn the converter OFF[1]
30	RLY_AUX_STAT	Aux Relay Status – when enabled (***PID 0x8089***), this pin should be tied to an auxiliary normally-open contact on the Aux contactor with the other side tied to BIAS+ to indicate the actual state of the contactor[1]
31	RLY_INPUT_ STAT	Input Relay Status – when enabled (***PID 0x8089***), this pin should be tied to an auxiliary normally-open contact on the input contactor with the other side tied to BIAS+ to indicate the actual state of the contactor[1]
32	HV_CLK-	Differential "-" clock output to the high voltage sense interface
33	HV_DOUT+	Differential "+" data output to the high voltage sense interface
34	HV_SHIELD	Chassis ground connection for high voltage sense cable shield
35	COM_SHIELD	Chassis ground connection for CAN/RS-485 cable shield

[1] Can be left unconnected if not used

Serial Communications

The IPM is available with either a CAN or RS-485 isolated serial interface, depending on which model is being used. The CAN interface utilizes the OzCAN serial protocol whereas the RS-485 option utilizes Modbus.

To allow for easy daisy chaining of multiple IPMs or termination of the serial network, redundant serial interface pins have been provided. Figure 15 illustrates how to use the pins to daisy chain multiple IPMs on a single multi-drop network (CAN or RS-485), as well as proper termination of the end nodes on the network. Termination resistors are typically **120Ω** for CAN bus and **100Ω** for RS-485 based on typical cable impedances and drivers used for each.

⚠ CAUTION ⚠

If the converter is located at the end of the serial bus, a termination resistor ***must*** be connected for reliable bus operation.

© 2026 All rights reserved.

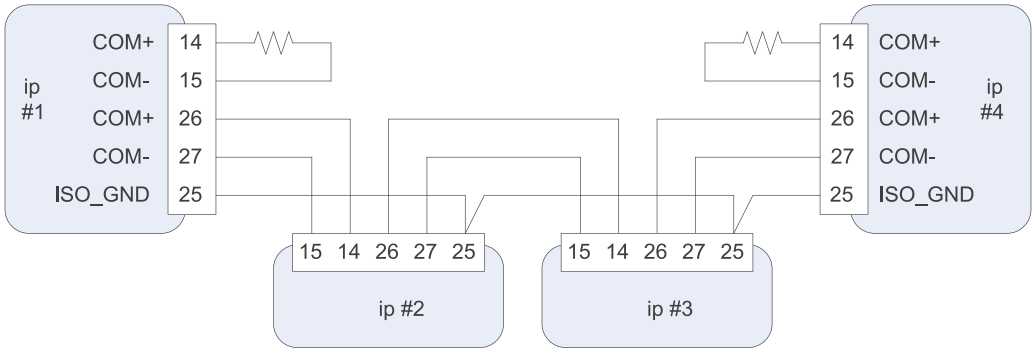

Figure 15 – Serial Interface Daisy Chain and Termination

High Voltage Sense Module

The IPM DC/DC Converter requires the use of Trystar's High Voltage Sense module (11141-01) as shown in Figure 13. This module provides isolated high voltage measurement circuits that can measure the external DC input voltage (Boost Mode) or output voltage (Buck mode). The IPM serial control interface is designed to directly connect to the low-voltage serial interface on the High Voltage Sense module.

Pre-charge Circuit

The IPM module provides low side, inductive drivers to control the pre-charge function if required. The RLY_INPUT driver (pin 12) is intended to control a contactor used to hold off the input voltage during the pre-charge operation. The PCHG_ENA driver (pin 7), is intended to control, i.e. enable/disable, the pre-charge circuitry. Please reference page 10 for details on pre-charge implementations. Reference the Owners Manual for detailed electrical specifications for the inductive drivers.

CAUTION

Failure to control the in-rush currents to acceptable limits can cause catastrophic damage to the IPM and void the warranty.

PARAMETER REGISTER INTERFACE

The DC/DC converter is controlled, monitored, and configured via a parameter register set. This register set can be accessed through several different interfaces including RS-485 and CAN bus serial communication links, depending on the model of the IPM power module being used. There are three types of registers implemented by the control software:

- **Command Registers** – Writes to these registers will command the converter to perform a specific action, such as turning on/off, changing an operational set point such as voltage/current, etc.
- **Instrumentation Registers** – These read-only registers are used to return various measurements and status information from the converter.

© 2026 All rights reserved.

- **Configuration Registers** – These are non-volatile registers that are used to configure the various operational modes and settings for the converter. In general, writes to these registers will take effect immediately and will also be stored in non-volatile memory so their values will be retained when power is cycled.

Register Properties

Parameter ID

The Parameter ID (PID) listed in the tables below represents a numerical identifier for each parameter.

Data Types

Parameters are specified as either 16-bit or 32-bit quantities and may be signed or unsigned entities. The tables below indicate this information using the following abbreviations for the Data Type:

U16 = Parameter is an unsigned 16-bit value

U32 = Parameter is an unsigned 32-bit value

S16 = Parameter is a signed 16-bit value

S32 = Parameter is a signed 32-bit value

Parameters that are specified as Boolean are stored as unsigned 16-bit values – a value of all zeros indicates FALSE and any non-zero value indicates TRUE.

Access Level

The access level for each register is defined as follows:

W = Writeable – the parameter is writable by the user

R = Readable – the parameter is readable by the user

P = Protected – the parameter is password protected

O = Operating – the parameter may be written while DC/DC Converter is ON, writes to any parameter without this indicator will be ignored if the converter is ON

© 2026 All rights reserved.

Command Registers

Table 2 – Command Register Set

PID	Data Type	Description	Units	Min	Max	Access Level
0x0000	U16	On/Off Control	ENUM	0	1	RWO
0x0001	S16	Voltage Setpoint	0.1 V	0	32767	RWO
0x0002	S16	Current Setpoint	0.1 A	-32768	32767	RWO
0x0003	U16	Control Mode	ENUM	0	1	RW
0x0004	U16	Fault Reset	ENUM	0	1	RWO
0x0005	U16	Precharge Enable	ENUM	0	1	RW
0x0006	U16	Aux Relay Enable	ENUM	0	1	RW
0x0007	U16	Host Heartbeat	n/a	0	65535	RW
0x0008	U16	Restore Default Configuration	n/a	0	65535	RWP
0x0019	U16	Dynamic Output Impedance	1 mΩ	0	65535	RWO

PID 0x0000 On/Off Control

This register is used to turn the converter ON or OFF as follows:

0 = OFF - This turns the DC/DC converter OFF

1 = ON - This turns the DC/DC converter ON

If ***PID 0x804E - Hardware On/Off Pin Enable*** is set to TRUE, this command register will be ignored. Instead, the converter is turned ON or OFF using the dedicated ON/OFF hardware pin.

PID 0x0001 Voltage Setpoint

This register is used to adjust the output voltage when the converter is operating in voltage control mode. The default setpoint following a power-on reset is specified by ***PID 0x804C – Default Voltage Setpoint***. This command does not change the default voltage stored in the configuration memory, it merely provides a dynamic and temporary override from the default value.

PID 0x0002 Current Setpoint

This register is used to adjust the current when the converter is operating in current control mode. The default setpoint following a power-on reset is specified by ***PID 0x804D – Default Current Setpoint***. This command does not change the default current stored in the configuration memory, it merely provides a dynamic and temporary override from the default value. In Buck mode, the controlled inductor current is the converter output current, whereas in Boost mode the controlled inductor current is the input current.

PID 0x0003 Control Mode

This register is used to set the converter's Control mode. The default mode following a power

© 2026 All rights reserved.

on reset is specified by ***PID 0x804B – Default Control Mode***. Writing to this register is only required when there is a need to dynamically change the mode. Note that writes to this register are only allowed if the converter is in the "Idle" or Off state. Control modes are enumerated as follows:

0 = Voltage Control Mode

1 = Current Control Mode

PID 0x0004 Fault Reset

This register is used to reset any latched fault. Any faults that still exist will remain latched after this command is executed. Legal registers values are as follows:

0 = NOP - No reset action requested

1 = RESET - Attempt a fault reset

PID 0x0005 Pre-Charge Enable

This register is used to issue a manual charge command to the converter to initiate the pre-charge process. This command is only used when the converter is in the ***Pre-Charge state***, and if ***PID 0x8082 – Pre-Charge Auto-Enable*** = 0, otherwise it will be ignored. Legal registers values are as follows:

0 = NOP - No charge action requested

1 = CHARGE - Start charging

PID 0x0006 Auxiliary Relay Enable

This register is used to control the auxiliary relay driver. Legal registers values are as follows:

0 = DISABLE – Turns off active low output

1 = ENABLE – Turns on active low output

PID 0x0007 Host Heartbeat

This register serves as a heartbeat monitor for the host controller. It is expected that the host controller increments this register at a defined rate, with periodic resets to zero. The DC/DC converter will monitor this register and assert the fault if it hasn't incremented by 1, or been reset to zero, within the timeout period defined by ***PID 0x8032 – Host Heartbeat Timeout.*** This fault check can be disabled by setting the Host Heartbeat Timeout to 0.

PID 0x0019 Dynamic Output Impedance

This register is used to adjust the virtual output impedance when the one of the Output Impedance modes has been enabled (***PID 0x80BC*** = 1 or 2, see page 47 for details). The default impedance following a power-on reset is specified by ***PID 0x80BD – Default Output Impedance***. This command does not change the default value stored in the configuration memory, it merely provides a dynamic and temporary override from the default value.

PID 0x0008 Restore Default Configuration

Writing the key value, **0x55AA**, to this register causes the system to restore its non-volatile configuration memory to the factory default

© 2026 All rights reserved.

configuration. Successful execution of this command requires the system to be in the 'OFF' state.

⚠ CAUTION ⚠

Upon execution, all currently stored configuration data will be permanently destroyed and over written with the factory default configuration data.

Instrumentation Registers

Table 3 – Command Register Set

PID	Data Type	Description	Units	Access Level
0x4000	U16	Operating State	ENUM	R
0x4001	U16	Control Mode	ENUM	R
0x4002	S16	Input Voltage – Internal	0.1 V	R
0x4003	S16	Input Voltage – External	0.1 V	R
0x4004	S16	Output Voltage	0.1 V	R
0x4005	S16	Current, Phase A	0.1 A	R
0x4006	S16	Current, Phase B	0.1 A	R
0x4007	S16	Current, Phase C	0.1 A	R
0x4008	S16	Current, Total	0.1 A	R
0x4009	U16	IGBT Temperature A	1 DegC	R
0x400A	U16	IGBT Temperature B	1 DegC	R
0x400B	U16	IGBT Temperature C	1 DegC	R
0x400C	U16	PCB Temp	1 DegC	R
0x400D	U16	Contactor Status	ENUM	R
0x400E	U32	Warning Status	n/a	R
0x400F	U32	Fault Status	n/a	R
0x4010	U16	Register Operation Status	ENUM	R
0x4011	U16	Software Revision – Major	Integer	R
0x4012	U16	Software Revision – Minor	Integer	R
0x4013	U16	Bootloader Revision – Major	Integer	R
0x4014	U16	Bootloader Revision – Minor	Integer	R
0x4015	U16	HV Sense FPGA Revision – Major	Integer	R
0x4016	U16	HV Sense FPGA Revision – Minor	Integer	R
0x4017	U16	HV Sense FPGA Revision – Minor	Integer	R

© 2026 All rights reserved.

PID 0x4000 Operating State

The present DC/DC operating state is enumerated as shown in the table below. See page 14 for details on each of these operating states.

Value	State
0	Initializing
1	Calibrating
2	Wait for Vin
3	Wait for Pchg Cmd
4	Charge
5	Idle
6	On
7	Turn-Off
8	Fault
9-255	***Unknown: Reserved for future use***

PID 0x4001 Operating Mode

The present operating mode is enumerated as follows:

0 = Voltage Control

1 = Current Control

PID 0x4002 Input Voltage – Internal

This register reports the measured voltage at the input to the DC/DC.

PID 0x4003 Input Voltage - External

This register reports the measured input voltage sensed on the source's (external) side of the input contactor. This measurement is optional and is generally only used when the pre-charge function has been enabled.

PID 0x4004 Output Voltage

This register reports the measured output voltage.

PID 0x4005-0x4007 Current Phase A, B, C

These registers report the three individual average phase currents.

PID 0x4008 Current Total

This register reports the total current for the converter, i.e. the sum of all phases.

PID 0x4009-0x400B IGBT A, B, C Temperature

These registers report the measured temperature of each IGBT half bridge.

PID 0x400C PCB Temperature

This register reports the measured temperature on the internal control PCB.

PID 0x400D Contactor Status

The Input, Pre-charge, and Auxiliary contactors open/closed status bits are mapped as follows:

© 2026 All rights reserved.

Bit	Status
0	Input Contactor: 0 = Open, 1 = Closed
1	Pre-Charge Contactor: 0 = Open, 1 = Closed
1	Auxiliary Contactor: 0 = Open, 1 = Closed
3-15	***Reserved for future use***

PID 0x400E Warning Status

Warning bits are active when set to '1', and not present when set to '0'. See page 17 for details on each warning. The warning bits are mapped into the register as follows.

Bit	Warning
0	Phase A High Current
1	Phase B High Current
2	Phase B High Current
3	High Total Current
4	IGBT A High Temperature
5	IGBT B High Temperature
6	IGBT C High Temperature
7	PCB High Temperature
8	Vin Low Voltage
9	Vin High Voltage
10	Output High Voltage
11	5V Supply Out of Tolerance
12	15V Supply Out of Tolerance
13-31	*Reserved*

PID 0x400F Fault Status

Fault bits are active when set to a '1' and not present when set to a '0'. If a fault occurs, the corresponding bit is set to a '1' and remains set until a "1" is written to ***PID 0x0004 – Fault Reset***. When a fault occurs, the converter will go to the FAULT state and the converter will stop operating. The controller will stay in the FAULT state until the ***Fault Reset*** command is received. See page 18 for details on each fault condition. The fault bits are mapped as follows:

© 2026 All rights reserved.

Bit	Fault
0	H/W Desaturation A
1	H/W Desaturation A
2	H/W Desaturation C
3	H/W Drive Fault A
4	H/W Drive Fault B
5	H/W Drive Fault C
6	H/W DC Link Over Voltage
7	Vin Over Voltage
8	Vout Over Voltage
9	Over Temperature Phase A
10	Over Temperature Phase B
11	Over Temperature Phase C
12	Over Temperature PCB
13	Over Current - Phase A
14	Over Current - Phase B
15	Over Current - Phase C
16	Over Current - Total
17	Vin Under Voltage
18	Pre-Charge Timeout
19	Communications Error
20	H/W Interlock
21	Calibration Error
22	Configuration Memory
23	Invalid Factory Configuration
24	Invalid IPM Model
25	Invalid DC/DC Model
26	Aux Relay Monitor Error
27	Input Relay Monitor Error
28-31	*Reserved for future use*

© 2026 All rights reserved.

PID 0x4010 Register Operation Status

This register is updated after every parameter read or write operation and indicates whether the operation was completed successfully. The status is enumerated as follows:

Bit	Fault
0	Operation completed successfully
1	Error – Illegal/unsupported Parameter ID was supplied by the user
2	Error – A write was attempted to a Read-Only Parameter
3	Error – A read was attempted from a Write-Only Parameter
4	Error – User-provided data is not within legal range
5	Error – Configuration Memory Hardware Error
6	Error – Configuration Memory CRC Mismatch
7	Error – Invalid password provided for operation
8	Error – Operation not allowed when the DC/DC Converter is "ON"
9-255	*Unknown: Reserved for future use*

PID 0x4011-0x4012 Software Revision – Major/Minor

These values represent the major and minor revisions of the DC/DC Control software.

PID 0x4013-0x4014 Bootloader Revision – Major/Minor

These values report the major and minor revisions of the embedded bootloader software.

PID 0x4015-0x4016 HV Sense FPGA Revision – Major/Minor

These values report the major and minor revisions of the FPGA code used on the high voltage sense module.

PID 0x4017 DC/DC Heartbeat

This value is incremented by 1 at the period defined by ***PID 0x8035 – DC/DC Heartbeat Period***, and periodically resets to zero. It can be used by the host controller to monitor the integrity of the communication link and health of the converter.

Configuration Registers

These registers are used to configure the various operational modes and settings for the converter. Unless stated otherwise, writes to these registers will take effect immediately. Values are stored in local non-volatile EEPROM so that they are retained between power cycles.

© 2026 All rights reserved.

CAUTION

EEPROM devices have limited write cycle capability. While they can typically handle over 1 million write cycles, care should be taken not to continuously write to Configuration Registers. Poorly designed HMI and master controller applications that needlessly update configuration registers in a continuous fashion serve no purpose and will result in premature EEPROM failure.

When performing firmware updates, the software may automatically reset the values of the configuration registers and the associated contents of the EEPROM to their factory default values. This will occur if the configuration memory map for the newly installed firmware is not compatible with the previously programmed version of the firmware. The firmware determines this condition at power up by reading ***PID 0x8000*** – ***Factory Configuration Revision - Major***. If the major revision value stored in the EEPROM does not match the default major revision for that build of the firmware, then the previous configuration memory map is considered incompatible and will be automatically reset to the new factory defaults.

CAUTION

The user must take care when updating the firmware to understand whether the configuration memory will be reset, and if so, to save a copy of any custom settings prior to performing the firmware update.

The configuration registers presented below have been organized by functional groups. Within each functional group, the registers have been separated into two categories: Basic and Advanced. As the names suggest, Basic configuration registers are those that are used to configure the converter for common applications that do not require any special setup or tuning; Advanced registers are provided for more experienced users who may wish to modify the basic behavior or system tuning of the various converter controls.

Configuration Control Parameters

Table 4 – Command Register Set

PID	Data Type	Description	Units	Factory Default	Min	Max	Access Level
0x8000	U16	Factory Configuration Revision – Major	ENUM	2	0	0xFFFF	R
0x8001	S16	Factory Configuration Revision – Minor	0.1 V	0	0	0xFFFF	RO
0x8002	S16	User Configuration Revision	0.1 A	0	0	0xFFFF	RWO

© 2026 All rights reserved.

PID 0x8000-0x8001 Factory Configuration Revision – Major/Minor

These read-only values represent the major and minor revision of the default factory configuration stored in the configuration memory. Major revision changes to the default factory configuration are those that are not compatible with previous configurations, such as when new parameters are added to the configuration space that are required for proper converter operation, or if existing parameters change locations or formats. At startup, the firmware will read this value from memory and compare it against the factory default for the present build of the firmware. If the two values do not match, the firmware will automatically reset the configuration parameters to the present factory default values.

Minor revisions are those that do not require reloading the memory to the factory default values. This could be a result of a minor value change to the default value for a parameter or the addition of a new parameter that is not needed for proper converter operation.

PID 0x8002 User Configuration Revision

This is a generic register that is provided to allow the user or a higher-level controller to maintain revision information for custom settings to the configuration memory. The firmware does not use this value. The protocol for numbering and maintaining custom configurations is left up to the user.

Modbus Interface Parameters

The following set of parameters are provided to allow for customizing the Modbus interface for the end application. Refer to the IPM hardware manual to determine which models support the RS-485 Modbus interface. For more information regarding Trystar's implementation of the Modbus serial protocol. All the parameter registers implemented in the firmware are accessible through the Modbus interface.

Table 5 – Basic Modbus Interface Parameters

PID	Data Type	Description	Units	Factory Default	Min	Max	Access Level
0x800D	U16	Modbus Device Address	Integer	1	1	247	RWO[1]
0x800E	U16	Modbus Baud Rate	ENUM	2	0	5	RWO[1]

[1] These registers may be written at any time, but they will not take effect until the converter is power cycled

PID 0x800D Modbus Device Address

This parameter specifies the Modbus Device Address used by the converter.

PID 0x800E Modbus Baud Rate

This parameter is used to configure the serial baud rate for the Modbus interface. Legal values are as follows:

0 = 2400 bps

1 = 4800 bps

© 2026 All rights reserved.

2 = 19200 bps

3 = 38400 bps

4 = 57600 bps

5 = 115200 bps

Table 6 – Advanced Modbus Interface Parameters

PID	Data Type	Description	Units	Factory Default	Min	Max	Access Level
0x800F	U16	Modbus Parity	ENUM	0	0	2	RWO[1]

[1] These registers may be written at any time, but they will not take effect until the converter is power cycled

PID 0x800F Modbus Parity

This parameter is used to configure the parity mode used by the Modbus interface. Legal values are as follows:

0 = None

1 = Odd

2 = Even

CAN Interface Parameters

The following set of parameters are provided to allow for customizing the CAN interface for the end application. Refer to the IPM hardware manual to determine which models support the CAN interface.

Table 7 – Basic CAN Interface Parameters

PID	Data Type	Description	Units	Factory Default	Min	Max	Access Level
0x8014	U16	CAN Group ID	Integer	4	1	15	RWO[1]
0x8015	U16	CAN Module ID	Integer	1	1	31	RWO[1]
0x8016	U16	CAN Baud Rate	ENUM	2	0	5	RWO[1]

[1] These registers may be written at any time, but they will not take effect until the converter is power cycled

PID 0x8014 CAN Group ID

This parameter specifies the Group ID used by the converter.

PID 0x8015 CAN Module ID

This parameter specifies the Module ID used by the converter.

PID 0x8016 CAN Baud Rate

This parameter is used to configure the serial baud rate for the CAN interface. Legal values are as follows:

0 = 1 Mbps

1 = 500 kbps

© 2026 All rights reserved.

2 = 250 kbps

3 = 125 kbps

4 = 100 kbps

5 = 50 kbps

Table 7 – Basic CAN Interface Parameters

PID	Data Type	Description	Units	Factory Default	Min	Max	Access Level
0x8019	U16	CAN Status Destination Group ID	Integer	4	1	15	RWO[1]
0x801A	U16	CAN Status Destination Module ID	Integer	1	1	31	RWO[1]
0x801B	U16	CAN Automatic Alarm Transmit Enable	Boolean	FALSE	FALSE	TRUE	RWO[1]
0x801C	U16	CAN Update Rate – Voltage Status	10 ms	0	0	65535	RWO
0x801D	U16	CAN Update Rate – Current Status	10 ms	0	0	65535	RWO
0x801E	U16	CAN Update Rate – System Status	10 ms	0	0	65535	RWO
0x801F	U16	CAN Update Rate – Alarm Status	10 ms	0	0	65535	RWO
0x8020	U16	CAN Broadcast Message Receive Enable	ENUM	0	0	3	RWO

[1] These registers may be written at any time, but they will not take effect until the converter is power cycled

PID 0x8019 CAN Status Destination Group ID

This parameter specifies the Destination Group ID that the converter will use when sending the periodic status messages.

PID 0x801A CAN Status Destination Module ID

This parameter specifies the Destination Module ID that the converter will use when sending the periodic status messages.

PID 0x801B CAN Automatic Alarm Transmit Enable

This parameter is used to enable automatic transmission of the Alarm Status message upon a change of any warning or fault bit. Note that when enabled (parameter is set to TRUE), the checks for whether an automatic transmission should be sent occur on 1ms boundaries, so there may be up to 1ms of latency from when the offending event occurs to when the Alarm Status message is sent. When disabled (parameter is set to FALSE), a change in any warning or fault bit does not cause an automatic transmission of the Alarm Status message.

PID 0x801C-0x801F CAN Update Rates

These parameters are used to set the rate at which the corresponding status messages will be automatically transmitted by the firmware. These values specify the period between message transmissions. Setting a parameter to zero disables automatic/periodic transmission for the corresponding message.

© 2026 All rights reserved.

PID 0x8020 CAN Broadcast Message Receive Enable

This parameter determines whether the converter will accept broadcast messages from the host controller. Legal values for this parameter are encoded as follows:

0 = Do not accept broadcast messages

1 = Accept group-wide broadcast messages (Module ID = 0)

2 = Accept system-wide broadcast messages (Group ID = 0)

3 = Accept both group-wide and system-wide broadcast messages

Fault and Warning Parameters

Table 9 – Basic Fault and Warning Parameters

PID	Data Type	Description	Units	Factory Default	Min	Max	Access Level
0x8028	U16	Vin Under-Voltage Fault Threshold	0.1 V	360	0	65535	RWO
0x8029	U16	Vin Under-Voltage Warning Threshold	0.1 V	400	0	65535	RWO
0x802A	U16	Vin Over-Voltage Fault Threshold	0.1 V	650	0	65535	RWO
0x802B	U16	Vin Over-Voltage Warning Threshold	0.1 V	600	0	65535	RWO
0x802C	U16	Vout Over-Voltage Fault Threshold	0.1 V	4250	0	65535	RWO
0x802D	U16	Vout Over-Voltage Warning Threshold	0.1 V	4200	0	65535	RWO
0x802E	U16	Total Inductor Over-Current Fault Threshold	0.1 A	3750	0	65535	RWO
0x802F	U16	Total Inductor Over-Current Warning Threshold	0.1 A	3500	0	65535	RWO
0x8030	U16	Phase Over-Current Fault Threshold	0.1 A	1250	0	65535	RWO
0x8031	U16	Phase Over-Current Warning Threshold	0.1 A	1150	0	65535	RWO
0x8032	U16	Host Communication Timeout	1 ms	0	0	65535	RWO
0x8033	U16	DC/DC Heartbeat Period	1 ms	1000	1	65535	RWO

PID 0x8028 Input Under-Voltage Fault Threshold

This parameter defines the DC input under voltage fault threshold. If the DC input voltage falls below this value when the converter is ON, or if the user attempts to turn the converter on when the input is below this value, the application will automatically transition to the FAULT state and operation of the converter will be disabled (and forced OFF). This fault is not generated when the converter is OFF or when this parameter is set to a value of zero.

PID 0x8029 Input Under-Voltage Warning Threshold

This parameter defines the DC input voltage threshold below which

© 2026 All rights reserved.

the firmware will report a low voltage warning. Once below this warning threshold, the voltage must rise above the corresponding recover threshold before the firmware will clear the low voltage warning.

PID 0x802A Input Over-Voltage Fault Threshold

This parameter defines the DC input over voltage fault threshold. If the DC input voltage rises above this value, the converter will automatically transition to the FAULT state and operation of the converter will be disabled (and forced OFF).

PID 0x802B Input Over-Voltage Warning Threshold

This parameter defines the DC input voltage threshold above which the firmware will report a high voltage warning. Once above this warning threshold, the voltage must drop below the corresponding recover threshold before the firmware will clear the high voltage warning.

PID 0x802C Output Over-Voltage Fault Threshold

This parameter defines the DC output over voltage fault threshold. If the DC output voltage rises above this value, the application will automatically transition to the FAULT state and operation of the converter will be disabled (and forced OFF).

PID 0x802D Output Over-Voltage Warning Threshold

This parameter defines the DC output voltage threshold above which the firmware will report a high voltage warning. Once above this warning threshold, the voltage must drop below the corresponding recover threshold before the firmware will clear the high voltage warning.

PID 0x802E Total Inductor Over-Current Fault Threshold

This parameter defines the total inductor over-current fault threshold. If the current rises above this value for the duration specified in the corresponding Fault Time parameter, the converter will automatically transition to the FAULT state and operation of the application will be disabled (and forced OFF). In an interleaved topology, the total current is the sum of all interleaved phases. In Buck mode, the total inductor current is the output current, whereas in Boost mode the total inductor current is the input current.

PID 0x802F Total Inductor Over-Current Warning Threshold

This parameter defines the total inductor current threshold above which the firmware will report a high current warning. Once above this warning threshold, the current must fall below the corresponding recover threshold before the firmware will clear the high current warning.

In an interleaved topology, the current is the sum of all interleaved phases. In Buck mode, the total inductor current is the output current, whereas in Boost mode the total inductor current is the input current.

PID 0x8030 Phase Over-Current Fault Threshold

In an interleaved topology, this parameter defines the over-current fault threshold for each interleaved phase. If the current rises above this value for the duration specified in the corresponding Fault Time parameter, the converter will automatically transition to the FAULT state and operation of the application will be disabled (and forced OFF).

© 2026 All rights reserved.

PID 0x8031 Phase Over-Current Warning Threshold

In an interleaved topology, this parameter defines the current threshold for each interleaved phase above which the firmware will report a high phase current warning. Once above this warning threshold, the phase current must fall below the corresponding recover threshold before the firmware will clear the high phase current warning.

PID 0x8032 Host Communication Timeout

This parameter defines the fault timeout for the host heartbeat. It is expected that the host controller increments ***PID 0x0007 – Host Heartbeat,*** at a rate faster than this timeout value. The DC/DC converter will assert a fault if ***PID 0x0007 – Host Heartbeat*** hasn't incremented by 1, or been reset to zero, within this timeout period. The fault can be disabled by setting this value to 0.

PID 0x8033 DC/DC Heartbeat Period

This parameter defines how often the converter increments ***PID 0x4017 – DC/DC Heartbeat.***

Table 10 – Advanced Fault and Warning Parameters

PID	Data Type	Description	Units	Factory Default	Min	Max	Access Level
0x8037	U16	Vin Under-Voltage Warning Recover Delta	0.1 V	20	10	1000	RWO
0x8038	U16	Vin Over-Voltage Warning Recover Delta	0.1 V	50	10	1000	RWO
0x8039	U16	Vout Over-Voltage Warning Recover Delta	0.1 V	50	10	1000	RWO
0x803A	U16	Total Inductor Over-Current Warning Recover Delta	0.1 A	250	10	1000	RWO
0x803B	U16	Phase Over-Current Warning Recover Delta	0.1 A	250	10	1000	RWO

PID 0x8037 Vin Under Voltage Warning Recover Delta

This parameter defines the voltage delta above ***PID 0x8029 – Vin Under Voltage Warning*** Threshold that the input voltage must rise above to clear the corresponding warning bit.

PID 0x8038 Vin Over Voltage Warning Recover Delta

This parameter defines the voltage delta below ***PID 0x802B – Vin Over Voltage Warning Threshold*** that the input voltage must fall below to clear the corresponding warning bit.

PID 0x8039 Vout Over Voltage Warning Recover Delta

This parameter defines the voltage delta below ***PID 0x802D – Vout Over Voltage Warning Threshold*** that the output voltage must fall below to clear the corresponding warning bit.

PID 0x803A Total Inductor Over Current Warning Recover Delta

© 2026 All rights reserved.

This parameter defines the current delta below ***PID 0x802F – Total Inductor Over Current Warning Threshold*** that the current must fall below to clear the corresponding warning bit.

PID 0x803B Phase Over Current Warning Recover Delta

This parameter defines the current delta below PID 0x8031 – Phase Over Current Warning Threshold that the phase current must fall below to clear the corresponding warning bit.

Converter Control Parameters

Table 11 – Basic Converter Control Parameters

PID	Data Type	Description	Units	Factory Default	Min	Max	Access Level
0x804B	U16	Default Control Mode	ENUM	0	0	1	RW
0x804C	U16	Default Voltage Setpoint	0.1 V	4000	0	65535	RWO[1]
0x804D	U16	Default Current Setpoint	0.1A	0	0	65535	RWO[1]
0x804E	U16	Hardware On/Off Pin Enable	Boolean	FALSE	FALSE	TRUE	RWO
0x804F	U16	Hardware Interlock Pin Enable	Boolean	FALSE	FALSE	TRUE	RWO
0x8050	U16	Hardware Fault Reset Pin Enable	Boolean	FALSE	FALSE	TRUE	RWO

[1] These registers may be written at any time, but they will not take effect until the converter is power cycled

PID 0x804B Default Control Mode

This register is used to set the default operating mode. This register may not be changed while the converter is ON. Control modes are enumerated as follows:

0 = Voltage Control Mode

1 = Current Control Mode

PID 0x804C Default Voltage Setpoint

This parameter defines the default voltage set point to use when turning on in voltage control mode following a power-on-reset (POR). ***PID 0x0001 - Voltage Setpoint*** can be used to modify the voltage setpoint dynamically during operation. Writing a legal value to ***PID 0x0001 - Voltage Setpoint*** will override the default value stored in this register.

PID 0x804D Default Current Setpoint

This parameter defines the default current set point to use when turning on in current control mode following a power-on-reset (POR). ***PID 0x0002 - Current Setpoint*** can be used to modify the current setpoint dynamically during operation. Writing a legal value to ***PID 0x0002 - Current Setpoint*** will override the default value stored in this register. In Buck mode, the controlled current is the output current, whereas in Boost mode the controlled current is the *input* current.

© 2026 All rights reserved.

PID 0x804E Hardware On/Off Pin Enable

When this parameter is set to TRUE, the converter is turned 'ON' and 'OFF' using the dedicated On/Off hardware pin. When hardware pin control is enabled, the ***PID 0x0000 - On/Off Control*** register is not used and any writes to this register will be ignored.

PID 0x804F Hardware Interlock Pin Enable

This parameter is used to enable the external Hardware Interlock input pin. This pin can be used as a fast, emergency 'OFF' input or to prohibit converter operation. When this parameter is set to TRUE and the input pin is low (0V or not connected), the converter will immediately transition to the Fault state and will be forced 'OFF' of it was previously 'ON'.

PID 0x8050 Hardware Fault Reset Pin Enable

When this parameter is set to TRUE, the dedicated Fault Reset hardware pin may be used for resetting any fault conditions. This hardware pin is edge sensitive. When enabled and the input pin is transitioned from a low input (0V or not connected) to a high input, an attempt will be made to clear all faults. When this parameter is FALSE, the Fault Reset hardware pin is ignored. The use of the dedicated Fault Reset hardware pin does not affect the use of the ***PID 0x0004 – Fault Reset*** register; this command register may still be used to clear faults even if the hardware pin is enabled.

Table 12 – Advanced Converter Control Parameters

PID	Data Type	Description	Units	Factory Default	Min	Max	Access Level
0x8055	U16	Control Topology	ENUM	0	0	1	RW
0x8056	U16	Pulse Width Modulation Frequency	1 Hz	10000	1000	25000	RW
0x805F	U16	Maximum Voltage Command	0.1 V	8250[1]	0	8250[2]	RW
0x8060	U16	Minimum Voltage Command	0.1 V	0[1]	0	8250[2]	RW
0x8061	S16	Maximum Current Command	0.1 A	950[1]	-950	950[2]	RW
0x8062	S16	Minimum Current Command	0.1 A	-950[1]	-950	950[2]	RW

[1] Factory Default values will be different for converters provided by Trystar, refer to converter hardware manual for details

[2] Min/Max values may vary based on the selected IPM model, refer to IPM hardware manual for details

© 2026 All rights reserved.

PID 0x8055 Control Topology

This parameter defines the control topology for the converter. The legal values are as follows:

- 0 = Boost Topology
- 1 = Buck Topology

PID 0x8056 Pulse Width Modulation Frequency

This parameter defines the switching frequency for the power stage.

PID 0x805F-0x8060 Maximum/Minimum Voltage Command

When operating in voltage control mode, these parameters define the range of allowable voltage commands. Attempts to write a voltage command outside of this range will be ignored.

PID 0x8061-0x8062 Maximum/Minimum Current Command

When operating in current control mode, these parameters define the range of allowable current commands. Attempts to write a current command outside of this range will be ignored.

Current Regulator Parameters

Table 13 – Advanced Current Regulator Parameters

PID	Data Type	Description	Units	Factory Default	Min	Max	Access Level
0x8069	S16	Current Control K_p Scale	None	0[1]	-12	12	RWO[3]
0x806A	U16	Current Control Proportional Gain (K_p)	None	12286[1]	0	65535	RWO
0x806B	S16	Current Control T_i Scale	None	-1[1]	-12	12	RWO[3]
0x806C	U16	Current Control Integral Time Constant (T_i)	None	1[1]	0	65535	RWO
0x806D	U16	Current Command Slew Rate	1 A/s	100[1]	1	65535	RWO
0x806E	U16	Turn Off Current Slew Rate	1 A/s	100[1]	1	65535	RWO
0x806F	U16	Nominal Output Feedforward Voltage	V	400[1]	1	65535	RWO
0x8070	U16	Nominal Input Feedforward Voltage	V	200[1]	1	65535	RWO

[1] Factory Default values will be different for converters provided by Trystar, refer to converter hardware manual for details

[2] Min/Max values may vary based on the selected IPM model, refer to IPM hardware manual for details

[3] Changes in Scale values do not take effect until associated gain/time constant is changed or power is cycled

© 2026 All rights reserved.

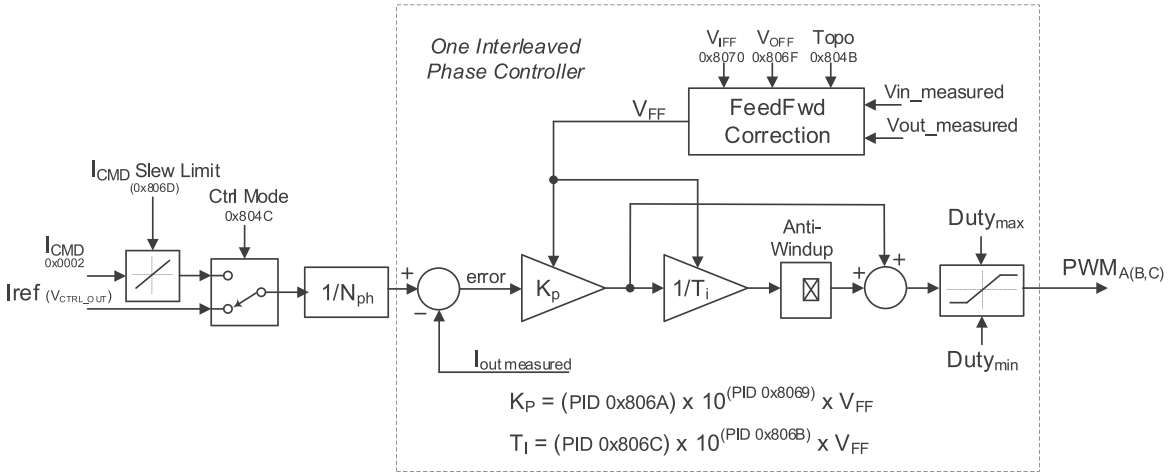

Figure 16 – Current Controller Block Diagram

PID 0x8069, 0x806B Current Control Scale Factors

These parameters are used to set the scale of the associated gain/time constant, PIDs 0x806A and 0x806C. They represent the power of ten by which the gain/time constant are multiplied, per the equations below:

$$K_p = (PID\ 0x806A) \times 10^{(PID\ 0x8069)}$$

$$T_i = (PID\ 0x806C) \times 10^{(PID\ 0x806B)}$$

PID 0x806A, 0x806C Current Control Gain Constants (Kp, Ki)

These parameters define the gain constants for the PI controller that regulates the inductor currents. Figure 16 above illustrates the PI topology used for current control. The gain constants represent the proportional gain term and the integral time constant. Both terms are scaled by the feedforward voltage term to remove that dependency. It is important to note that the current controller uses real word engineering units. The commanded and measured currents are in units of amps. currents. Figure 16 above illustrates the PI topology used for current control. The gain constants represent the proportional gain term and the integral time constant. Both terms are scaled by the feedforward voltage term to remove that dependency. It is important to note that the current controller uses real word engineering units. The commanded and measured currents are in units of amps.

PID 0x806D Current Command Slew Limit

This parameter defines the slew rate used when operating in current control mode and the current command is changed. This slew rate is used both at initial turn-on and whenever the current command is modified.

PID 0x806E Turn Off Current Sew Limit

This parameter defines the slew rate used when the DC/DC is turned off.

PID 0x806F,0x8070 Nominal Output/Input Feed Forward Voltage

The controller incorporates a voltage feed forward term within the digital controller, as illustrated in Figure 16 and Figure 17. These parameters

© 2026 All rights reserved.

define the nominal output/input voltages for which the PI controller was designed. The feed forward algorithm then corrects the system gain for any variations in actual measured voltage from the nominal. The feed forward gain adjust feature can be disabled by setting these parameters to zero.

Voltage Regulator Parameters

Table 14 – Advanced Voltage Regulator Parameters

PID	Data Type	Description	Units	Factory Default	Min	Max	Access Level
0x8078	S16	Voltage Control K_p Scale	None	-1[1]	-12	12	RWO[3]
0x8079	U16	Voltage Control Proportional Gain (K_p)	None	1[1]	0	65535	RWO
0x807A	S16	Voltage Control T_i Scale	None	0[1]	-12	12	RWO[3]
0x807B	U16	Voltage Control Integral Time Constant (T_i)	None	0[1]	0	65535	RWO
0x807C	S16	Voltage Control Max Current	0.1 A_{RMS}	100[1]	-32768	32767	RWO
0x807D	S16	Voltage Control Min Current	0.1 A_{RMS}	-100[1]	-32768	32767	RWO
0x807E	U16	Voltage Command Slew Rate	1 V/s	100[1]	1	65535	RWO

[1] Factory Default values will be different for converters provided by Trystar, refer to converter hardware manual for details

[2] Min/Max values may vary based on the selected IPM model, refer to IPM hardware manual for details

[3] Changes in Scale values do not take effect until associated gain/time constant is changed or power is cycled

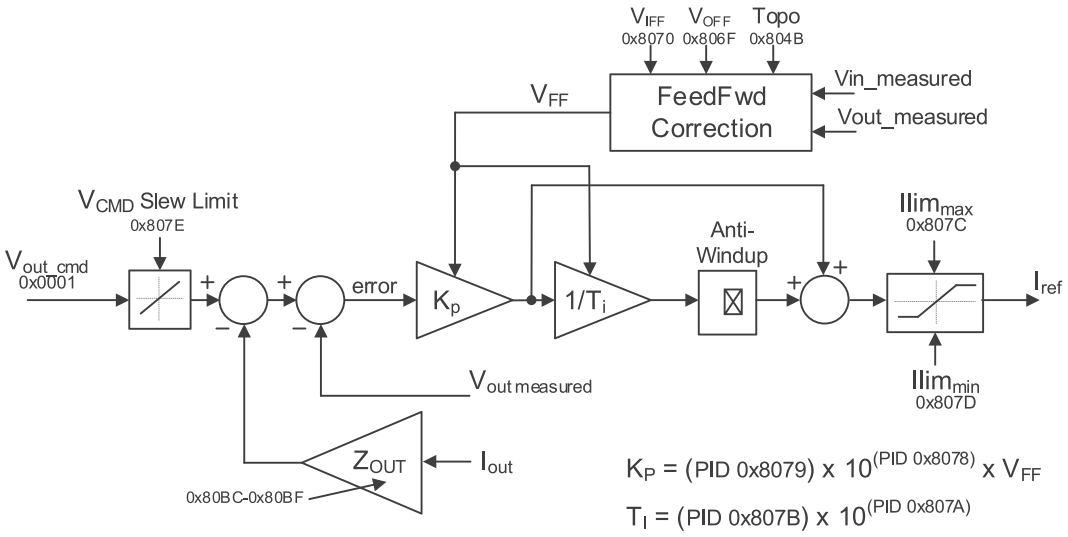

Figure 17 – Voltage Controller Block Diagram

© 2026 All rights reserved.

PID 0x8078, 0x807A Voltage Control Scale Factors

These parameters are used to set the scale of the associated gain/time constant, PIDs 0x8079 and 0x807B. They represent the power of ten by which the gain/time constant are multiplied, per the equations below:

$$K_p = (PID\ 0x8079) \times 1\ 0^{(PID\ 0x8078)}$$

$$T_i = (PID\ 0x807B) \times 1\ 0^{(PID\ 0x807A)}$$

PID 0x8079, 0x807B Voltage Control Gain Constants (Kp, Ki)

These parameters define the gain constants for the PI controller that regulates the output voltage. Figure 17 above illustrates the PI topology used for voltage control. The gain constants represent the proportional gain term and the integral time constant. Both terms are scaled by the feedforward voltage term to remove that dependency. It is important to note that the voltage controller uses real word engineering units. The commanded and measured voltages are in units of volts.

PID 0x807C Voltage Control Max Current

As illustrated in Figure 10, the DC/DC control architecture consists of an inner current control loop and an outer voltage controller. The output of the voltage loop PI controller serves as a current command to the inner loop. This parameter sets an upper limit on the current that the voltage loop can command.

PID 0x807D Voltage Control Min Current

As illustrated in Figure 10, the DC/DC control architecture consists of an inner current control loop and an outer voltage controller. The output of the voltage loop PI controller serves as a current command to the inner loop. This parameter sets a lower limit on the current that the voltage loop can command.

PID 0x807E Voltage Command Slew Limit

This parameter defines the slew rate used when the voltage command is changed. This slew rate is used both at initial turn-on and whenever the voltage command is modified.

Pre-charge Parameters

Table 15 – Basic Pre-charge Parameters

PID	Data Type	Description	Units	Factory Default	Min	Max	Access Level
0x8082	U16	Pre-charge Auto Enable	Boolean	TRUE	FALSE	TRUE	RW

PID 0x8082 Pre-Charge Auto-Enable

If set to True, this parameter allows the converter to automatically transition from the ***Pre-Charge*** to the ***Charge*** state if the sensed input voltage is greater than ***PID 0x8028 - Vin Under Voltage Fault Threshold***. If the parameter is set to False, the user must write a 1 to ***PID 0x0005 – Pre-Charge Enable*** to start the pre-charge process

© 2026 All rights reserved.

Table 16 – Advanced Pre-charge Parameters

PID	Data Type	Description	Units	Factory Default	Min	Max	Access Level
0x8087	U16	Pre-charge Enable	Boolean	TRUE	FALSE	TRUE	RW
0x8088	U16	Pre-charge Time-out Threshold	1 ms	20000	10	65535	RWO
0x8089	U16	Contactor Monitor Enables	ENUM	3	0	3	RW
0x808A	U16	Pre-charge Sense Location	ENUM	0	0	1	RW
0x808B	U16	Connect Voltage Delta Threshold	1 V	10	0	25	RWO
0x808C	U16	Contactor Close Time	1 ms	250	1	10000	RWO
0x808D	U16	Contactor De-bounce Time	1 ms	10	1	10000	RWO
0x808E	U16	Aux Contactor Fault Action	ENUM	0	0	1	RWO

[1] Factory Default values will be different for converters provided by Trystar, refer to converter hardware manual for details

PID 0x8087 Pre-Charge Enable

This Boolean parameter enables the use of the pre-charge control function in the DC/DC converter. If this parameter is set to FALSE, it is assumed that the pre-charge function is performed by another piece of equipment. In this case, the converter will not drive the Precharge Enable or Input Relay outputs when starting up. Instead, it simply transitions to the IDLE state once above the minimum voltage specified by ***PID 0x8028 - Vin Under-Voltage Fault Threshold.***

If this parameter is set to TRUE, the DC/DC controller will drive the Pre-charge Enable output prior to entering the CHARGE state. Once in the CHARGE state, the controller will wait for the voltage to rise to within the delta specified by ***PID 0x808B – Connect Voltage Delta Threshold*** of the voltage at the input or output as determined by ***PID 0x808A***. At this point, the Pre-charge Enable output will be disabled and the Input Relay driver will be enabled.

PID 0x8088 Pre-Charge Timeout Threshold

This parameter specifies the maximum amount of time to wait before reporting a pre-charge timeout fault. If the converter has not charged to the within voltage delta specified by ***PID 0x808B – Connect Voltage Delta Threshold*** of sensed input or output voltage within this amount of time, the converter will transition to the FAULT state. This parameter is only used if ***PID 0x8087 – Pre-charge Enable*** is set to TRUE (i.e. the converter is controlling the pre-charge function). If ***PID 0x8087 – Pre-charge Enable*** is set to FALSE, the controller will simply wait indefinitely for the voltage to rise above ***PID 0x8028 - Input Under-Voltage Fault Threshold.*** Setting this parameter to zero will disable the pre-charge timeout monitor.

PID 0x8089 Contactor Monitor Enables

This parameter is used to determine if contactor feedback monitors are enabled. If enabled, the converter will monitor the state of the contactors.

© 2026 All rights reserved.

If the contactor state does not match the commanded state at any point in time the converter will go to the FAULT state. The enumerated values for this parameter are as follows:

- 0 = No monitoring (i.e. no contactor feedback is provided or checked)
- 1 = Monitor Aux Contactor only
- 2 = Monitor Input Contactor only
- 3 = Monitor Both Contactors

PID 0x808A Pre-Charge Sense Selection

This parameter is used to configure which voltage measurement should be used by the precharge function.

- 0 = Use Output Voltage
- 1 = Use Input Voltage

PID 0x808B Connect Voltage Delta Threshold

This parameter defines the voltage difference relative to the voltage at the input or output as determined by ***PID 0x808A – Pre-Charge Sense Selection*** to charge to prior to closing the main input contactor.

PID 0x808C Contactor Close Time

This parameter is used to specify the actuation time for both the main input contactor and the pre-charge contactor (if used). This field should be set to the longest expected delay from when the contactor is driven open/closed by the software to when the contactor has mechanically changed state (including all expected debounce time).

PID 0x808D Contactor Debounce Time

This parameter is used to specify the debounce time for both the main input contactor and the pre-charge contactor (if used). This field is used to delay reporting a change of state in the contactor prior to considering the change valid.

PID 0x808E Aux Contactor Fault Action

This parameter is used to specify what action to take with the Auxiliary drive output when a fault occurs.

- 0 = Open on a fault
- 1 = Leave as is on a fault

Table 17 – Advanced Output Impedance Control Parameters

PID	Data Type	Description	Units	Factory Default	Min	Max	Access Level
0x80BC	U16	Output Impedance Mode	ENUM	0	0	2	RW
0x80BD	U16	Default Output Impedance	1 mΩ	0	0	65535	RWO

© 2026 All rights reserved.

PID 0x80BC Output Impedance Mode

The DC/DC converter provides the ability to adjust the output voltage based on an emulated output impedance and the converter's output current. This can be used for two different use cases as indicated in the mode descriptions below. Note that for Buck mode, the output current is the sum of the measured inductor currents. For Boost mode, the output current must be estimated based on the sum of the inductor currents (i.e. input current), the ratio of the measured input and output voltages, and minor adjustments based on the estimated converter efficiency.

The possible output impedance modes are encoded as follows:

- 0 = ***Disabled*** – No voltage adjustments are made.
- 1 = ***Droop Control*** – This mode provides a simple and reliable method to ensure paralleled DC/DC converters share the load current when operating in voltage control mode. Droop control is implemented using a virtual output impedance, which, when multiplied by the output current, is used to reduce the voltage set point per Ohm's law. The droop impedance should be chosen so that at maximum output current, the output voltage at the load is the minimum acceptable value. Note that for regenerative loads (i.e. negative output current), the output voltage will increase based on this impedance.
- 2 = ***Cable Impedance Adjust*** – This mode is used to compensate for the voltage drop between the converter output and the load due to an interconnect with moderate impedance. This mode operates like Droop Control described above, but in the opposite direction. In this mode, the virtual output impedance should be set to the estimated cable impedance. As the output current to the load increases, the converter's output voltage set point will also increase based this impedance such that the voltage seen at the load is close to the desired value. Note that for regenerative loads (i.e. negative output current), the output voltage will decrease based on this impedance.

When one of the output impedance modes described above is enabled, the resulting adjusted voltage command will be limited to the range specified by PID 0x805F-0x8060 – Maximum/Minimum Voltage Command. If the adjusted voltage exceeds this range, the resulting voltage command will be clamped to the specified minimum or maximum value.

PID 0x80BD Default Output Impedance

This configuration register is used to set the default virtual output impedance following a power on reset of the DC/DC controller. At any point following the converter's power-on initialization, the virtual output impedance may be adjusted by writing to ***PID 0x0019 – Dynamic Output Impedance***. This register is ignored when the Output Impedance Mode is disabled (PID 0x80BC = 0).

© 2026 All rights reserved.

TRYSTAR POWER STUDIO™ TOOL

The Trystar Power Studio™ tool is a Microsoft Windows based Graphical User Interface (GUI) that can be used to easily configure and control the IPM DC/DC Converter. The tool communicates with the converter over the CAN or RS-485 serial port and provides a simple, intuitive user interface. Some of the features provided by Power Studio™ include:

- Simple tabbed interfaces:
  - Dashboard
  - Configuration
  - Instrumentation
- Dashboard for converter control and monitoring
- Converter configuration control, including:
  - Editing configurations
  - Downloading/uploading configurations
  - Archiving multiple configuration files
- Firmware Update Utility

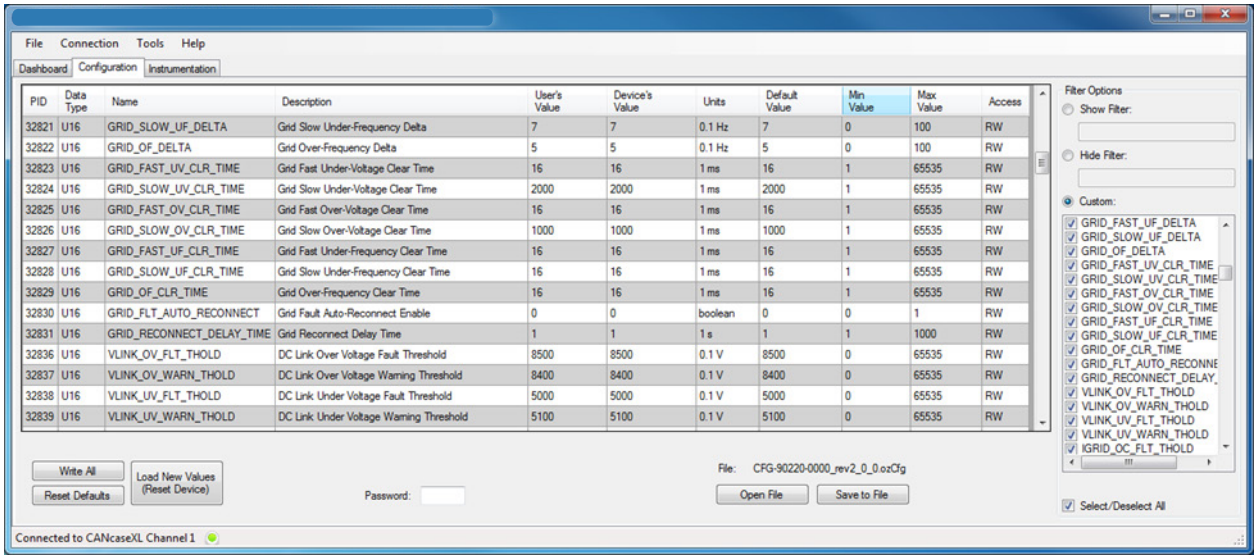

© 2026 All rights reserved.

WARRANTY AND PRODUCT INFORMATION

Limited Warranty

What does this warranty cover and how long does it last? This Limited Warranty is provided by Trystar LLC ("Trystar") and covers defects in workmanship and materials in your power supply. This Warranty Period lasts for 5 years from the date of purchase at the point of sale to you, the original end user customer, unless otherwise agreed in writing. You will be required to demonstrate proof of purchase to make warranty claims. This Limited Warranty is transferable to subsequent owners but only for the unexpired portion of the Warranty Period. Subsequent owners also require original proof of purchase as described in "What proof of purchase is required?" An extended warranty is available for purchase; contact Trystar Sales for details.

What will Trystar do? During the Warranty Period Trystar will, at its option, repair the product (if economically feasible) or replace the defective product free of charge, provided you notify Trystar of the product defect within the Warranty Period, and provided that through inspection Trystar establishes the existence of such a defect and that it is covered by this Limited Warranty.

Trystar will, at its option, use new and/or reconditioned parts in performing warranty repair and building replacement products. Trystar reserves the right to use parts or products of original or improved design in the repair or replacement. If Trystar repairs or replaces a product, its warranty continues for the remaining portion of the original Warranty Period or 90 days from the date of the return shipment to the customer, whichever is greater. All replaced products and all parts removed from repaired products become the property of Trystar.

Trystar covers both parts and labor necessary to repair the product and return shipment to the customer via an Trystar-selected non-expedited surface freight within the contiguous United States and Canada. Alaska, Hawaii and locations outside of the United States and Canada are excluded. Contact Trystar Customer Service for details on freight policy for return shipments from excluded areas.

How do you get service? If your product requires troubleshooting or warranty service, contact your merchant. If you are unable to contact your merchant, or the merchant is unable to provide service, contact Trystar directly at:

USA

Telephone: 507-333-3990

www.trystar.com

Direct returns may be performed according to the Trystar Return Material Authorization Policy described in your product manual.

What proof of purchase is required? In any warranty claim, dated proof of purchase must accompany the product and the product must not have been disassembled or modified without prior written authorization by

© 2026 All rights reserved.

Trystar. Proof of purchase may be in any one of the following forms:

- The dated purchase receipt from the original purchase of the product at point of sale to the end user
- The dated dealer invoice or purchase receipt showing original equipment manufacturer (OEM) status
- The dated invoice or purchase receipt showing the product exchanged under warranty

What does this warranty not cover? Claims are limited to repair and replacement, or if in Trystar's discretion that is not possible, reimbursement up to the purchase price paid for the product. Trystar will be liable to you only for direct damages suffered by you and only up to a maximum amount equal to the purchase price of the product. This Limited Warranty does not warrant uninterrupted or error-free operation of the product or cover normal wear and tear of the product or costs related to the removal, installation, or troubleshooting of the customer's electrical systems. This warranty does not apply to and Trystar will not be responsible for any defect in or damage to:

a. The product if it has been misused, neglected, improperly installed, physically damaged or altered, either internally or externally, or damaged from improper use or use in an unsuitable environment

b. The product if it has been subjected to fire, water, generalized corrosion, biological infestations, or input voltage that creates operating conditions beyond the maximum or minimum limits listed in the Trystar product specifications including high input voltage from generators and lightning strikes

c. The product if repairs have been done to it other than by Trystar or its authorized service centers (hereafter "ASCs")

d. The product if it is used as a component part of a product expressly warranted by another manufacturer

e. The product if its original identification (trade-mark, serial number) markings have been defaced, altered, or removed

f. The product if it is located outside of the country where it was purchased

g. Any consequential losses that are attributable to the product losing power whether by product malfunction, installation error or misuse.

Disclaimer

Product

THIS LIMITED WARRANTY IS THE SOLE AND EXCLUSIVE WARRANTY PROVIDED BY Trystar IN CONNECTION WITH YOUR Trystar PRODUCT AND IS, WHERE PERMITTED BY LAW, IN LIEU OF ALL OTHER WARRANTIES, CONDITIONS, GUARANTEES, REPRESENTATIONS, OBLIGATIONS AND LIABILITIES, EXPRESS OR IMPLIED, STATUTORY OR OTHERWISE IN CONNECTION WITH THE PRODUCT, HOWEVER ARISING (WHETHER BY CONTRACT, TORT, NEGLIGENCE, PRINCIPLES OF MANUFACTURER'S LIABILITY, OPERATION OF LAW, CONDUCT, STATEMENT OR OTHERWISE), INCLUDING WITHOUT

© 2026 All rights reserved.

RESTRICTION ANY IMPLIED WARRANTY OR CONDITION OF QUALITY, MERCHANTABILITY OR FITNESS FOR A PARTICULAR PURPOSE. ANY IMPLIED WARRANTY OF MERCHANTABILITY OR FITNESS FOR A PARTICULAR PURPOSE TO THE EXTENT REQUIRED UNDER APPLICABLE LAW TO APPLY TO THE PRODUCT SHALL BE LIMITED IN DURATION TO THE PERIOD STIPULATED UNDER THIS LIMITED WARRANTY. IN NO EVENT WILL Trystar BE LIABLE FOR: (a) ANY SPECIAL, INDIRECT, INCIDENTAL OR CONSEQUENTIAL DAMAGES, INCLUDING LOST PROFITS, LOST REVENUES, FAILURE TO REALIZE EXPECTED SAVINGS, OR OTHER COMMERCIAL OR ECONOMIC LOSSES OF ANY KIND, EVEN IF TRYSTAR HAS BEEN ADVISED, OR HAD REASON TO KNOW, OF THE POSSIBILITY OF SUCH DAMAGE, (b) ANY LIABILITY ARISING IN TORT, WHETHER OR NOT ARISING OUT OF TRYSTAR'S NEGLIGENCE, AND ALL LOSSES OR DAMAGES TO ANY PROPERTY OR FOR ANY PERSONAL INJURY OR ECONOMIC LOSS OR DAMAGE CAUSED BY THE CONNECTION OF A PRODUCT TO ANY OTHER DEVICE OR SYSTEM, AND (c) ANY DAMAGE OR INJURY ARISING FROM OR AS A RESULT OF MISUSE OR ABUSE, OR THE INCORRECT INSTALLATION, INTEGRATION OR OPERATION OF THE PRODUCT. IF YOU ARE A CONSUMER (RATHER THAN A PURCHASER OF THE PRODUCT IN THE COURSE OF A BUSINESS) AND PURCHASED THE PRODUCT IN A MEMBER STATE OF THE EUROPEAN UNION, THIS LIMITED WARRANTY SHALL BE SUBJECT TO YOUR STATUTORY RIGHTS AS A CONSUMER UNDER THE EUROPEAN UNION PRODUCT WARRANTY DIRECTIVE 1999/44/EC AND AS SUCH DIRECTIVE HAS BEEN IMPLEMENTED IN THE EUROPEAN UNION MEMBER STATE WHERE YOU PURCHASED THE PRODUCT. FURTHER, WHILE THIS LIMITED WARRANTY GIVES YOU SPECIFIC LEGAL RIGHTS, YOU MAY HAVE OTHER RIGHTS WHICH MAY VARY FROM EU MEMBER STATE TO EU MEMBER STATE OR, IF YOU DID NOT PURCHASE THE PRODUCT IN AN EU MEMBER STATE, IN THE COUNTRY YOU PURCHASED THE PRODUCT WHICH MAY VARY FROM COUNTRY TO COUNTRY AND JURISDICTION TO JURISDICTION.

Return Material Authorization Policy

Before returning a product directly to Trystar you must obtain a Return Material Authorization (RMA) number and the correct factory "Ship To" address. Products must also be shipped prepaid. Product shipments will be refused and returned at your expense if they are unauthorized, returned without an RMA number clearly marked on the outside of the shipping box, if they are shipped collect, or if they are shipped to the wrong location. When you contact Trystar to obtain service, please have your instruction manual ready for reference and be prepared to supply:

- The serial number of your product
- Information about the installation and use of the unit
- Information about the failure and/or reason for the return
- A copy of your dated proof of purchase

Return Procedure

Package the unit safely, preferably using the original box and packing materials. Please ensure that your product is shipped fully insured in the original packaging or equivalent. This warranty will not apply where the product is damaged due to improper packaging. Include the following:

© 2026 All rights reserved.

- The RMA number supplied by Trystar clearly marked on the outside of the box.
- A return address where the unit can be shipped. Post office boxes are not acceptable.
- A contact telephone number where you can be reached during work hours.
- A brief description of the problem.

Ship the unit prepaid to the address provided by your Trystar customer service representative.

If you are returning a product from outside of the USA or Canada - In addition to the above, you MUST include return freight funds and you are fully responsible for all documents, duties, tariffs, and deposits.

Out of Warranty Service

If the warranty period for your product has expired, if the unit was damaged by misuse or incorrect installation, if other conditions of the warranty have not been met, or if no dated proof of purchase is available, your unit may be serviced or replaced for a flat fee. If a unit cannot be serviced due to damage beyond salvation or because the repair is not economically feasible, a labor fee may still be incurred for the time spent making this determination.

To return your product for out of warranty service, contact Trystar Customer Service for a Return Material Authorization (RMA) number and follow the other steps outlined in "Return Procedure".

Payment options such as credit card or money order will be explained by the Customer Service Representative. In cases where the minimum flat fee does not apply, as with incomplete units or units with excessive damage, an additional fee will be charged. If applicable, you will be contacted by Customer Service once your unit has been received.

© 2026 All rights reserved.

TRYSTAR®

15765 Acorn Trail / Faribault, MN 55021 / 507.333.3990
Document Number: 0013IB1026 / © 2026 Trystar, LLC. All rights reserved.