TRYSTAR®

OZIP-R1230H

TRYSTAR INTELLIGENT POWER MODULE

205A, 850V, High-Capacity Fan-Cooled



15765 Acorn Trail / Faribault, MN 55021 / 507.333.3990

TRYSTAR.com

Features

- 205A max continuous phase current
- 850V Max DC link voltage
- 32-Bit floating point control processor
- Choice of inverter, motor drive, or DC/DC controls
- CAN or Modbus RS-485 Interface
- Rugged, IP55 rated, polycarbonate housing
- -40 to +65^{0}C operation
- 100% environmental stress screened
- Easy setup via serial port with included Trystar Power Studio™ configuration tool



Description

Trystar Intelligent Power Modules (IPMs) elevate integrated power to the next level. While others claim intelligent power, Trystar IPMs go way beyond simple digital protection and fault management with the inclusion of a 32-bit floating point processor running highly configurable, application-optimized control code. Trystar IPMs have both the power and the intelligence for your most demanding applications.

Trystar IPMs leverage Trystar's 15+ years of experience providing digital power solutions to demanding OEMs. They are compact and rugged, and also easy to use. Choose inverter, motor drive, or DC/DC controls, and let OZip-R1230H accelerate your time to market while simultaneously reducing your development cost and risk.

OZip-R1230H is optimized for systems operating with continuous currents up to 205A, and DC link voltages up to 850V. Safe and reliable operation is ensured by extensive monitoring of all critical parameters, including DC link voltage, phase currents, bias supply voltages, and IGBT and controller temperatures. Proprietary digital gate drivers provide additional, localized protection against erroneous drive commands and output short circuits. IGBT temperature may be used to control fan speed, maximizing the life of the IP55 rated fans.

Trystar IPMs are designed and qualified for demanding environments. They utilize ruggedized construction throughout, and feature an encapsulated planar DC link with polypropylene film capacitors, and automotive grade components with generous deratings. All Trystar IPMs are environmentally stress screened to further ensure high reliability.

Trystar IPMs are controllable through a CAN or Modbus RS-485 serial interface, and are easily configured using the supplied Trystar Power Studio™ configuration tool. Application-optimized interfaces along with general purpose I/O are provided to facilitate system design.

Trystar Intelligent Power Modules serve as the foundation for Trystar's complete OEM inverter, motor drive, and DC/DC converter solutions, and are available in multiple air and liquid cooled configurations to satisfy a wide range of application requirements. Visit Trystar.com for more info.

© 2026 Trystar, LLC. All rights reserved.

Absolute Maximum Ratings	
Operating Temperature	-40°C to 55°C
Storage Temperature	-55°C to 65°C
DC Link Voltage [1]	1000V
Phase Current	300 ARMS
Bias Supply Voltage	28 VDC
Recommended Operating Conditions	
Maximum continuous phase current [2] 3kHz, 45°C ambient temp	205 ARMS
Maximum transient load current (10 seconds max) [2]	1.3x cont. current (up to 267A)
DC Link Voltage	850V max
Switching Frequency	12 kHz max
Bias Supply Voltage	24V +/- 5%
Bias Supply Current at 24 VDC	3.0A max (includes fans)
Mechanical	
Outline Dimensions	506mm x 314mm x 238mm
Power Terminals	M8 x 1.25 stud
Control Connector	Ampseal 35

[1] Over-voltage protection disables switching when DC link voltage exceeds 900V.

[2] Current ratings and curves are for 50/60Hz inverter operation or DC/DC converter with 50% duty cycle, and 750V DC link voltage. Consult Trystar for capabilities with other operating conditions.

Continuous Operating Current Capability

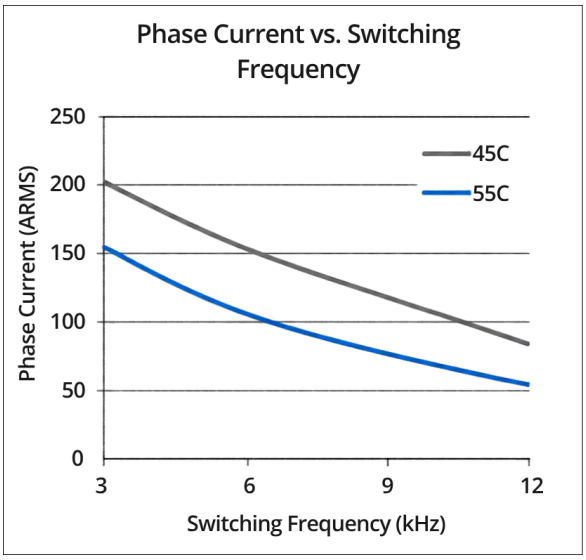

© 2026 Trystar, LLC. All rights reserved.

How to Specify

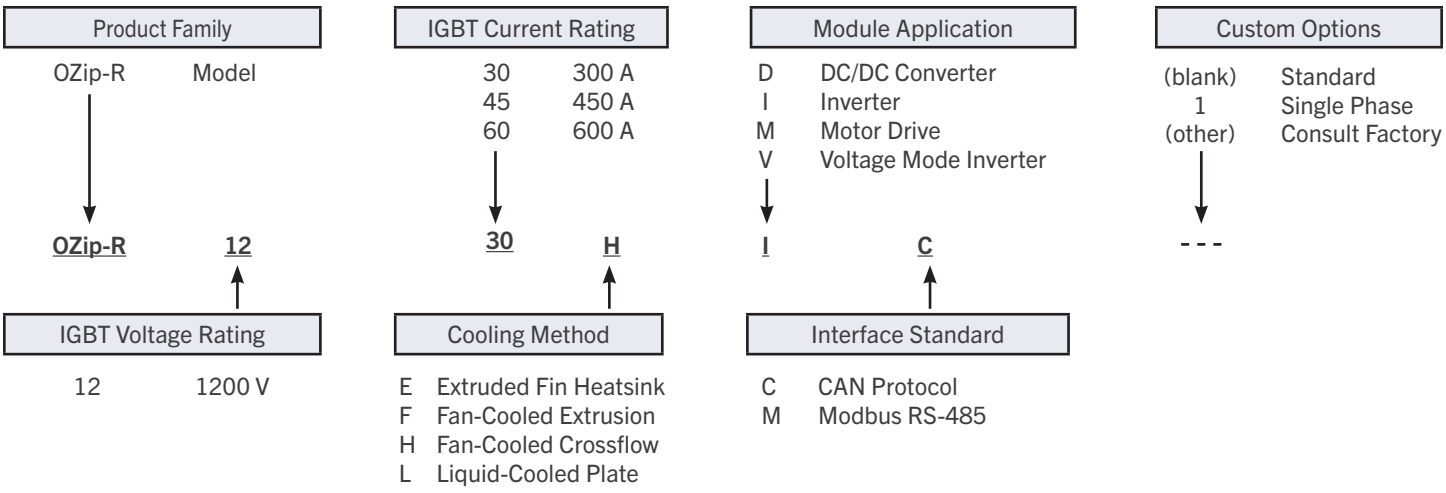

© 2026 Trystar, LLC. All rights reserved.

TRYSTAR®

15765 Acorn Trail / Faribault, MN 55021 / 507.333.3990
Document Number: 0025BR1026 / © 2026 Trystar, LLC. All rights reserved.

TRYSTAR.com